JIANGSU CHANGJING ELECTRONICS TECHNOLOGY CO., LTD

SOT-23 Plastic-Encapsulate Transistors

BC856 TRANSISTOR (PNP)
BC857
BC858

SOT-23

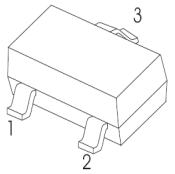

1. BASE
2. EMITTER
3. COLLECTOR

FEATURES
- Ideally suited for automatic insertion
- For Switching and AF Amplifier Applications

MAXIMUM RATINGS (T_a=25℃ unless otherwise noted)

Symbol	Parameter	Value	Unit
V_{CBO}	Collector-Base Voltage BC856 BC857 BC858	 -80 -50 -30	V
V_{CEO}	Collector-Emitter Voltage BC856 BC857 BC858	 -65 -45 -30	V
V_{EBO}	Emitter-Base Voltage	-5	V
I_C	Collector Current –Continuous	-0.1	A
P_C	Collector Power Dissipation	200	mW
$R_{\Theta JA}$	Thermal Resistance From Junction To Ambient	625	℃/W
T_J	Junction Temperature	150	℃
T_{stg}	Storage Temperature	-65～+150	℃

DEVICE MARKING

BC856A=3A;BC856B=3B;
BC857A=3E;BC857B=3F;BC857C=3G;
BC858A=3J; BC858B=3K; BC858C=3L

ELECTRICAL CHARACTERISTICS (T_a=25℃ unless otherwise specified)

Parameter		Symbol	Test conditions	Min	Max	Unit
Collector-base breakdown voltage	**BC856** **BC857** **BC858**	V_{CBO}	I_C= -10μA, I_E=0	-80 -50 -30		V
Collector-emitter breakdown voltage	**BC856** **BC857** **BC858**	V_{CEO}	I_C= -10mA, I_B=0	-65 -45 -30		V
Emitter-base breakdown voltage		V_{EBO}	I_E= -1μA, I_C=0	-5		V
Collector cut-off current	**BC856** **BC857** **BC858**	I_{CBO}	V_{CB}= -70 V , I_E=0 V_{CB}= -45 V , I_E=0 V_{CB}= -25 V , I_E=0		-0.1	μA
Emitter cut-off current		I_{EBO}	V_{EB}= -5 V , I_C=0		-0.1	μA
DC current gain	**BC856A, 857A,858A** **BC856B, 857B,858B** **BC857C,BC858C**	h_{FE}	V_{CE}= -5V,I_C= -2mA	125 220 420	250 475 800	
Collector-emitter saturation voltage		$V_{CE(sat)}$	I_C=-100mA,I_B= -5 mA		-0.5	V
Base-emitter saturation voltage		$V_{BE(sat)}$	I_C= -100mA, I_B= -5mA		-1.1	V
Transition frequency		f_T	V_{CE}= -5 V, I_C= -10mA f=100MHz	100		MHz
Collector capacitance		C_{ob}	V_{CB}=-10V, f=1MHz		4.5	pF

Typical Characteristics

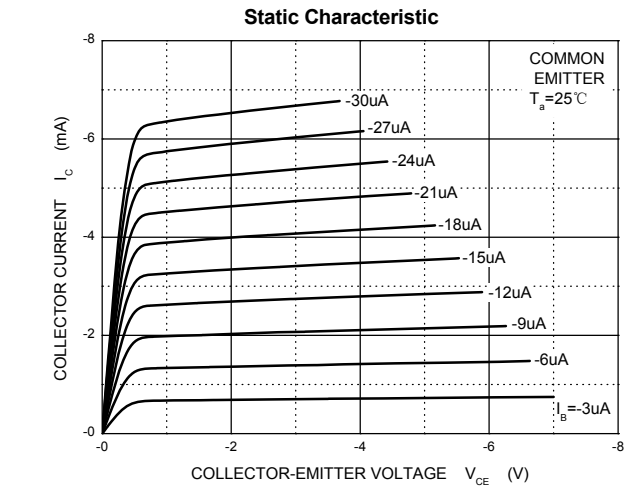

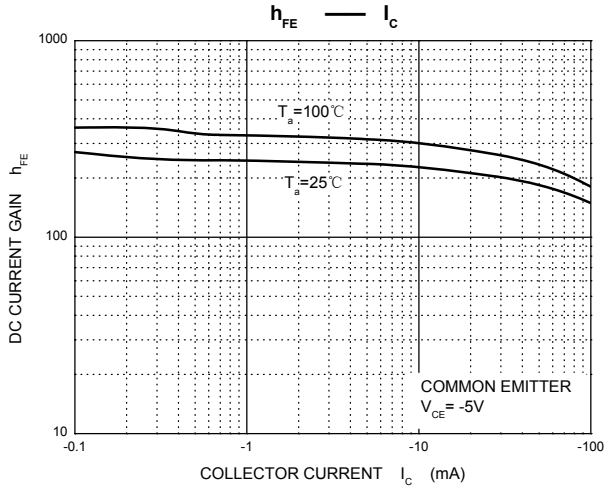

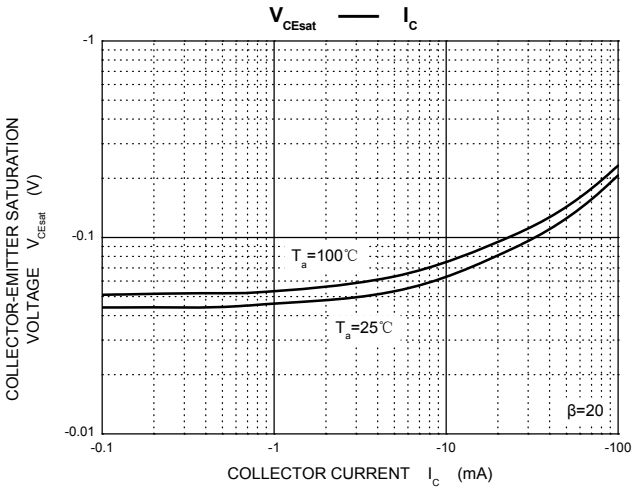

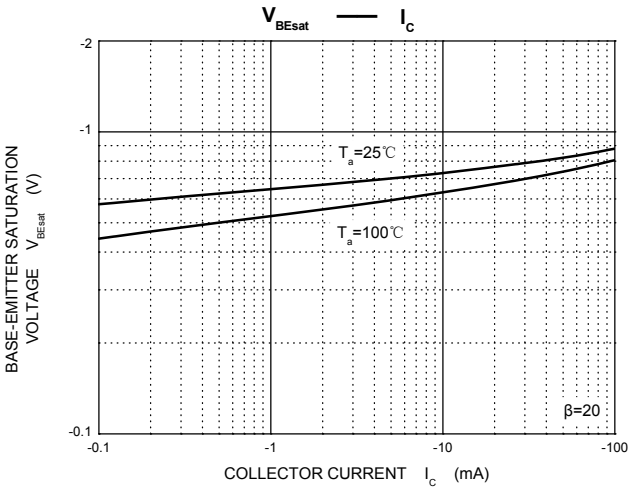

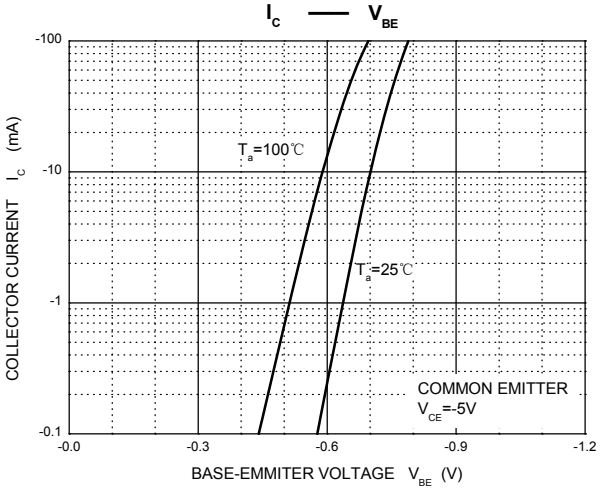

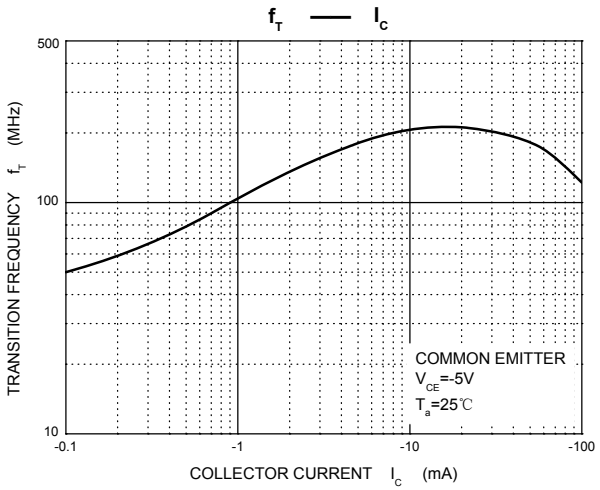

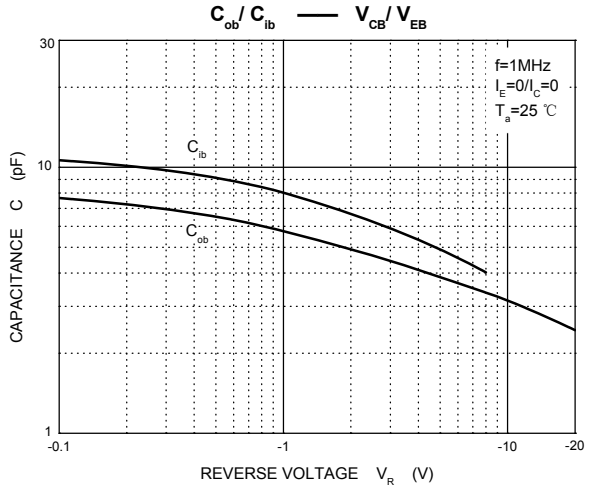

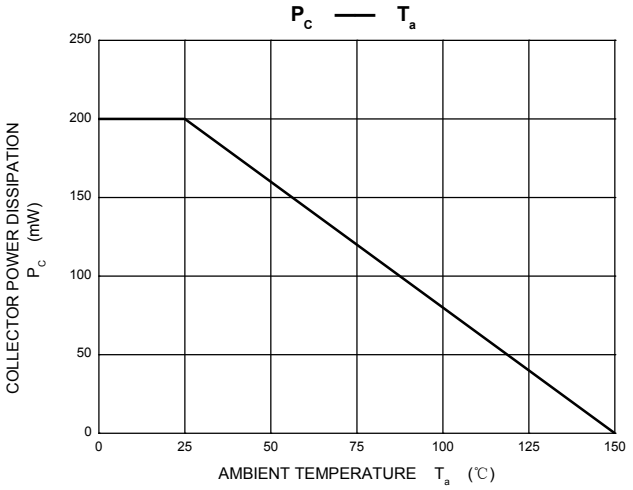

SOT-23 Package Outline Dimensions

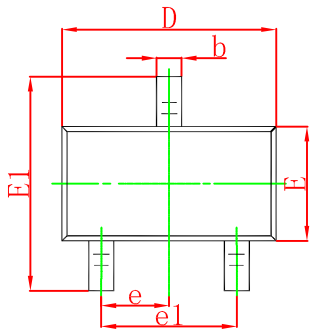

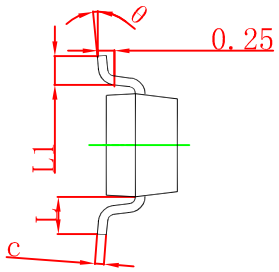

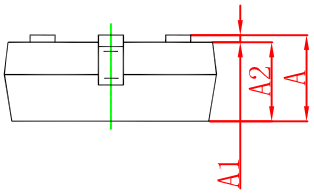

Symbol	Dimensions In Millimeters		Dimensions In Inches	
	Min	Max	Min	Max
A	0.900	1.150	0.035	0.045
A1	0.000	0.100	0.000	0.004
A2	0.900	1.050	0.035	0.041
b	0.300	0.500	0.012	0.020
c	0.080	0.150	0.003	0.006
D	2.800	3.000	0.110	0.118
E	1.200	1.400	0.047	0.055
E1	2.250	2.550	0.089	0.100
e	0.950 TYP		0.037 TYP	
e1	1.800	2.000	0.071	0.079
L	0.550 REF		0.022 REF	
L1	0.300	0.500	0.012	0.020
θ	0°	8°	0°	8°

SOT-23 Suggested Pad Layout

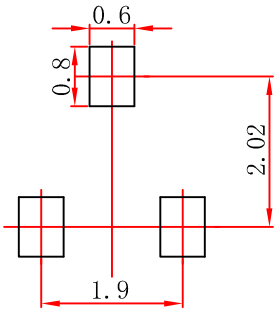

Note:
1.Controlling dimension:in millimeters.
2.General tolerance:± 0.05mm.
3.The pad layout is for reference purposes only.

NOTICE

JSCJ reserves the right to make modifications,enhancements,improvements,corrections or other changes without further notice to any product herein. JSCJ does not assume any liability arising out of the application or use of any product described herein.

SOT-23 Embossed Carrier Tape

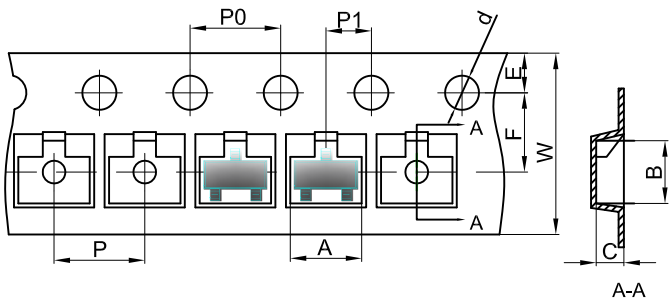

Packaging Description:

SOT-23 parts are shipped in tape. The carrier tape is made from a dissipative (carbon filled) polycarbonate resin. The cover tape is a multilayer film (Heat Activated Adhesive in nature) primarily composed of polyester film, adhesive layer, sealant, and anti-static sprayed agent. These reeled parts in standard option are shipped with 3,000 units per 7" or 17.8cm diameter reel. The reels are clear in color and is made of polystyrene plastic (anti-static coated).

Dimensions are in millimeter										
Pkg type	A	B	C	d	E	F	P0	P	P1	W
SOT-23	3.15	2.77	1.22	Ø1.50	1.75	3.50	4.00	4.00	2.00	8.00

SOT-23 Tape Leader and Trailer

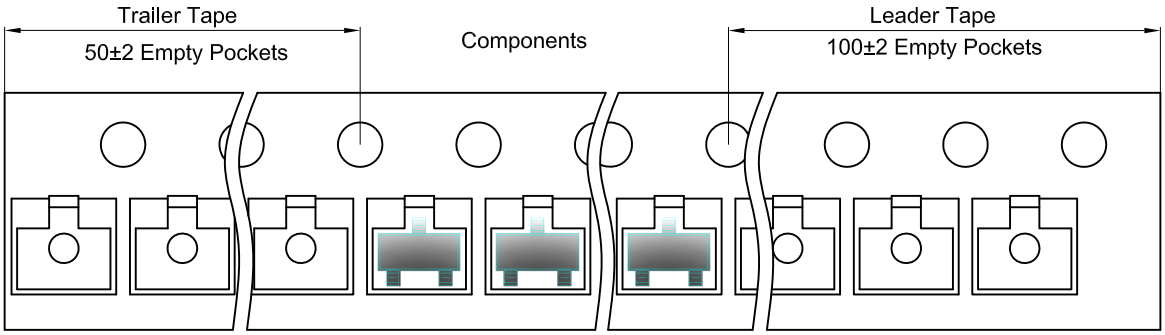

SOT-23 Reel

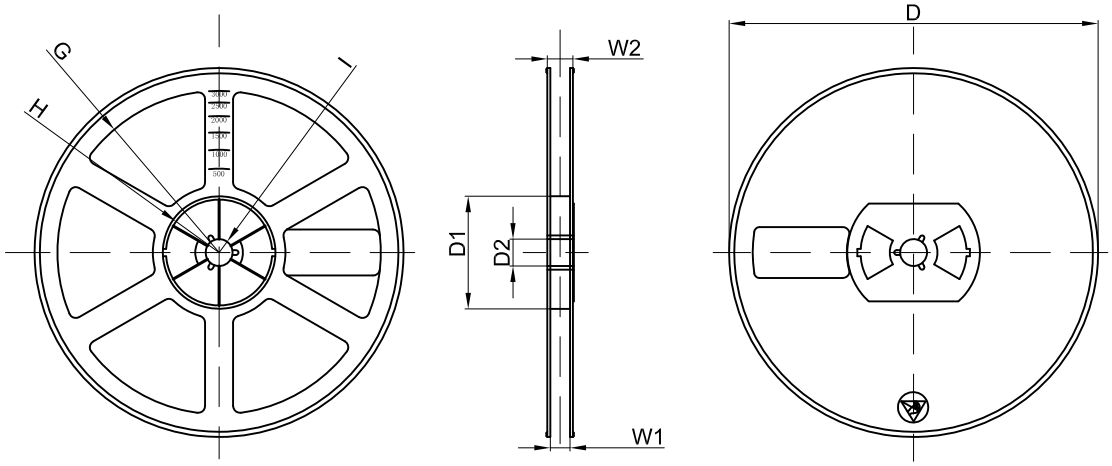

Dimensions are in millimeter								
Reel Option	D	D1	D2	G	H	I	W1	W2
7"Dia	Ø178.00	54.40	13.00	R78.00	R25.60	R6.50	9.50	12.30

REEL	Reel Size	Box	Box Size(mm)	Carton	Carton Size(mm)	G.W.(kg)
3000 pcs	7 inch	45,000 pcs	203×203×195	180,000 pcs	438×438×220	