JIANGSU CHANGJING ELECTRONICS TECHNOLOGY CO., LTD

TO-220-3L Plastic-Encapsulate Voltage Regulator

CJ7906 Three-terminal negative voltage regulator

FEATURES

- Maximum output current
  I_{OM}: 1.5 A
- Output voltage
  V_O:- 6V
- Continuous total dissipation
  P_D: 1.5 W (T_a= 25 ℃)

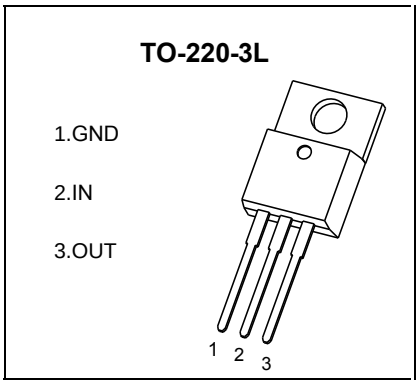

ABSOLUTE MAXIMUM RATINGS (Operating temperature range applies unless otherwise specified)

Parameter	Symbol	Value	Unit
Input Voltage	V_i	-35	V
Thermal Resistance from Junction to Air	$R_{\theta JA}$	83.3	℃/W
Operating Junction Temperature Range	T_{OPR}	-40~+125	℃
Storage Temperature Range	T_{STG}	-65~+150	℃

ELECTRICAL CHARACTERISTICS AT SPECIFIED VIRTUAL JINCTION TEMPERATURE (Vi=-11V, Io=500mA,Ci=2.2μF, Co=1μF, unless otherwise specified)

Parameter	Symbol	Test conditions		Min	Typ	Max	Unit
Output Voltage	Vo		25℃	-5.76	-6	-6.24	V
		-8V≤V_i≤-21V, Io=5mA-1A	0-125℃	-5.7	-6	-6.3	V
Load Regulation	ΔVo	Io=5mA-1.5A	25℃		15	120	mV
		Io=250mA-750mA	25℃		5	60	mV
Line Regulation	ΔVo	-8V≤V_i≤-25V	25℃		12.5	120	mV
		-9V≤V_i≤-13V	25℃		4	60	mV
Quiescent Current	Iq		25℃		1.5	2	mA
Quiescent Current Change	ΔIq	-8V≤V_i≤-25V	0-125℃			1.3	mA
	ΔIq	5mA≤I_O≤1A	0-125℃			0.5	mA
Output Noise Voltage	V_N	10Hz≤f≤100KHz	25℃		150		μV/Vo
Output Voltage Drift	ΔVo/ΔT	I_O=5mA	0-125℃		-0.4		mV/℃
Ripple Rejection	RR	-9V≤V_i≤-19V,f=120Hz	0-125℃	54	60		dB
Dropout Voltage	Vd	Io=1A	25℃		1.1		V
Peak Current	Ipk		25℃		2.1		A

* Pulse test.

TYPICAL APPLICATION

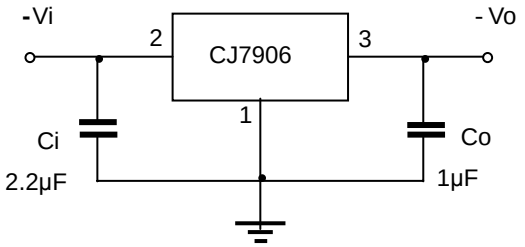

TO-220-3L Package Outline Dimensions

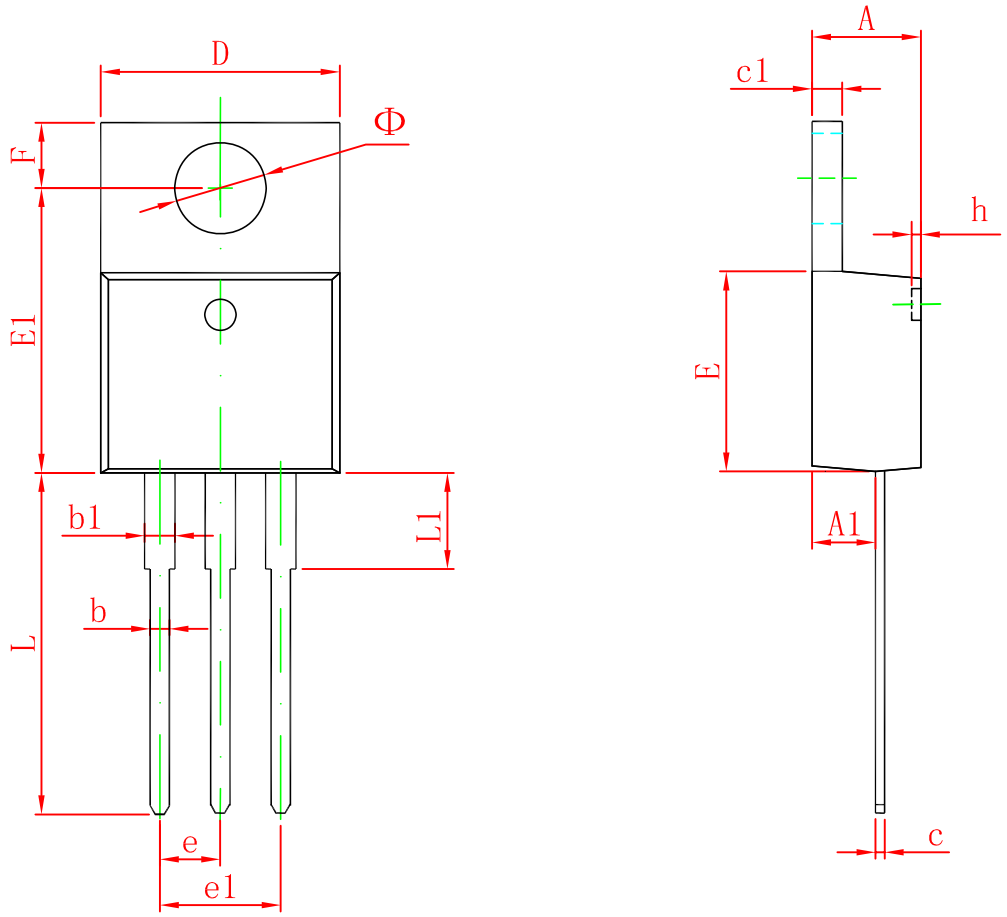

Symbol	Dimensions In Millimeters		Dimensions In Inches	
	Min	Max	Min	Max
A	4.470	4.670	0.176	0.184
A1	2.520	2.820	0.099	0.111
b	0.710	0.910	0.028	0.036
b1	1.170	1.370	0.046	0.054
c	0.310	0.530	0.012	0.021
c1	1.170	1.370	0.046	0.054
D	10.010	10.310	0.394	0.406
E	8.500	8.900	0.335	0.350
E1	12.060	12.460	0.475	0.491
e	2.540 TYP		0.100 TYP	
e1	4.980	5.180	0.196	0.204
F	2.590	2.890	0.102	0.114
h	0.000	0.300	0.000	0.012
L	13.400	13.800	0.528	0.543
L1	3.560	3.960	0.140	0.156
Φ	3.735	3.935	0.147	0.155