JIANGSU CHANGJING ELECTRONICS TECHNOLOGY CO., LTD

TO-92 Plastic-Encapsulate Voltage Regulator

CJ79L09 Three-terminal negative voltage regulator

TO-92

1. GND
2. IN
3. OUT

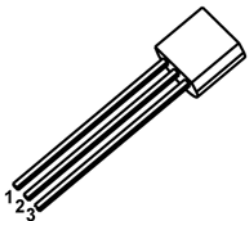

FEATURES

- Maximum output current
  $I_{OM:}$ 0.1A
- Output voltage
  V_o: - 9 V
- Continuous total dissipation
  P_D:0.625 W (T_a= 25 ℃)

MARKING

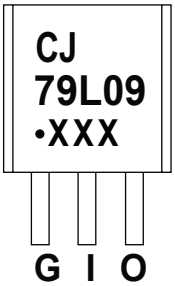

CJ79L09=Device code
Solid dot=Green molding compound device, if none,the normal device
XXX=Code

ORDERING INFORMATION

Part Number	Package	Packing Method	Pack Quantity
CJ79L09	TO-92	Bulk	1000pcs/Bag
CJ79L09-TA	TO-92	Tape	2000pcs/Box

ABSOLUTE MAXIMUM RATINGS (Operating temperature range applies unless otherwise specified)

Parameter	Symbol	Value	Unit
Input Voltage	V_i	-30	V
Thermal Resistance from Junction to Ambient	$R_{\theta JA}$	200	℃/W
Operating Junction Temperature Range	T_{OPR}	-40~+125	℃
Storage Temperature Range	T_{STG}	-65~+150	℃

ELECTRICAL CHARACTERISTICS

T_a=25℃ unless otherwise specified

(Vi=-16V,Io=40mA,Ci=0.33μF,Co=0.1μF, unless otherwise specified)

Parameter	Symbol	Test conditions		Min	Typ	Max	Unit
Output Voltage	Vo		25℃	-8.64	-9.0	-9.36	V
		-12V≤V_I≤-24V, Io=1mA-40mA	0-125℃	-8.55	-9.0	-9.45	V
		Io=1mA-70mA		-8.55	-9.0	-9.45	V
Load Regulation	△Vo	Io=1mA-100mA	25℃		19	90	mV
		Io=1mA-40mA	25℃		11	40	mV
Line Regulation	△Vo	-12 V≤V_I≤-24V	25℃		45	175	mV
		-13V≤V_I≤-24V	25℃		40	125	mV
Quiescent Current	Iq		25℃		4.1	6.0	mA
Quiescent Current Change	△Iq	-13V≤V_I≤-24V	0-125℃			1.5	mA
	△Iq	1mA≤V_I≤40mA	0-125℃			0.1	mA
Output Noise Voltage	V_N	10Hz≤f≤100KHz	25℃		58		μV/Vo
Ripple Rejection	RR	-15V≤V_I≤-24V,f=120Hz	0-125℃		45		dB
Dropout Voltage	Vd		25℃		1.7		V

* Pulse test.

TYPICAL APPLICATION

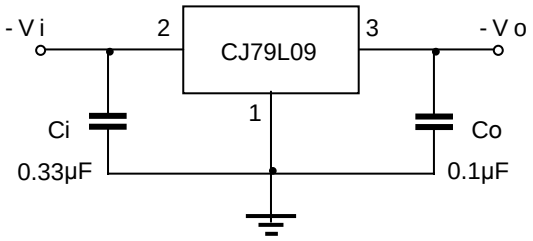

Note: Bypass capacitors are recommended for optimum stability and transient response and should be located as close as possible to the regulators

Typical Characteristics

Output Characteristics

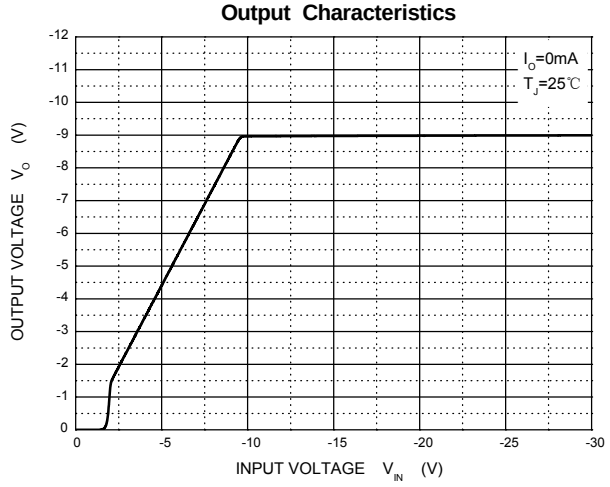

Dropout Characteristics

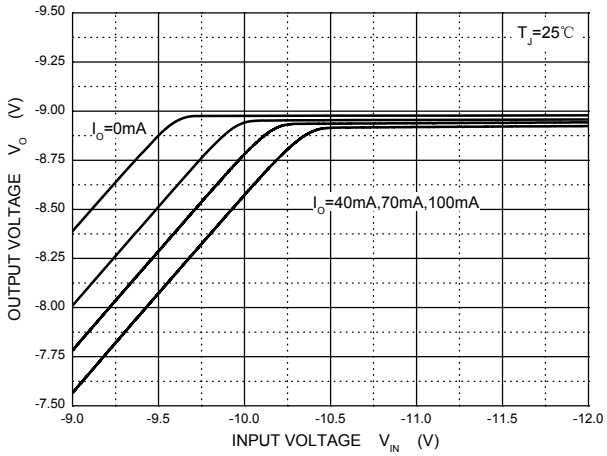

Quiescent Current vs Input Voltage

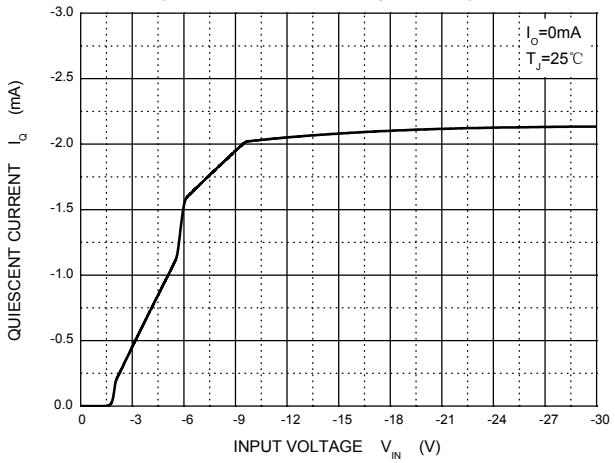

Current Cut-off Grid Voltage

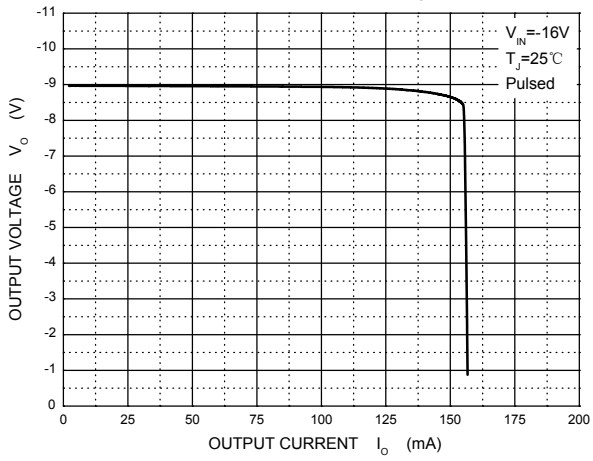

Output Voltage vs Junction Temperature

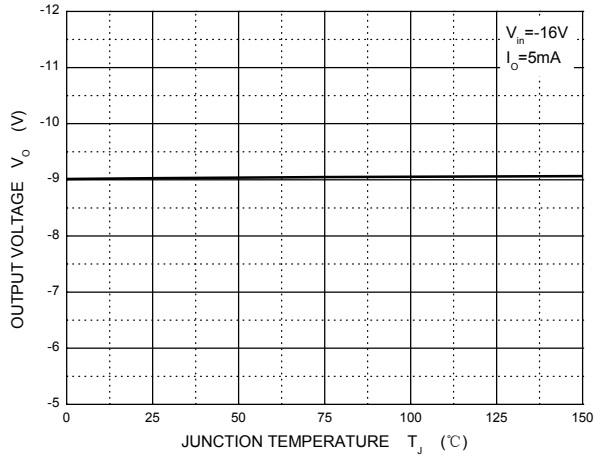

Power Derating Curve

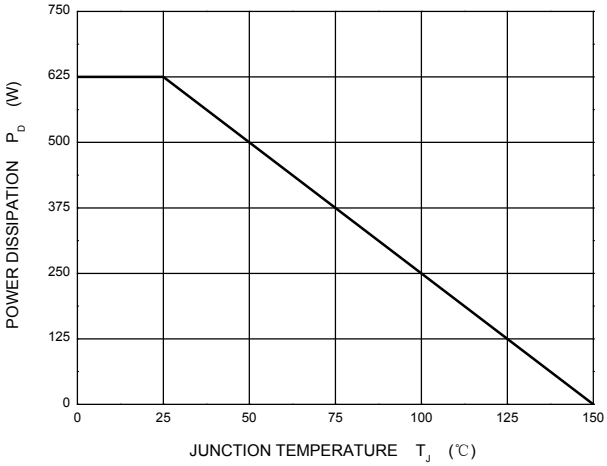

TO-92 Package Outline Dimensions

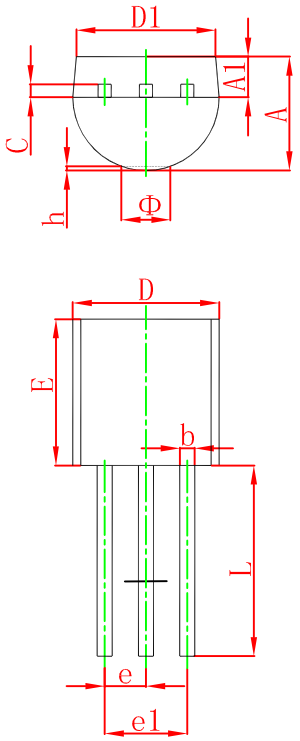

Symbol	Dimensions In Millimeters		Dimensions In Inches	
	Min	Max	Min	Max
A	3.300	3.700	0.130	0.146
A1	1.100	1.400	0.043	0.055
b	0.380	0.550	0.015	0.022
c	0.360	0.510	0.014	0.020
D	4.400	4.700	0.173	0.185
D1	3.430		0.135	
E	4.300	4.700	0.169	0.185
e	1.270 TYP		0.050 TYP	
e1	2.440	2.640	0.096	0.104
L	14.100	14.500	0.555	0.571
Φ		1.600		0.063
h	0.000	0.380	0.000	0.015

TO-92 Suggested Pad Layout

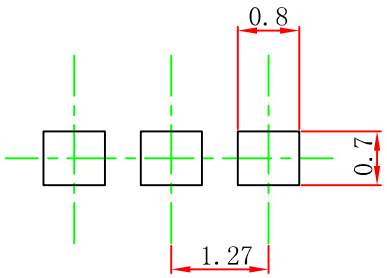

Note:
1.Controlling dimension:in millimeters.
2.General tolerance:± 0.05mm.
3.The pad layout is for reference purposes only.

NOTICE
JSCJ reserves the right to make modifications,enhancements,improvements,corrections or other changes without further notice to any product herein. JSCJ does not assume any liability arising out of the application or use of any product described herein.

TO-92 PACKAGE TAPEING DIMENSION

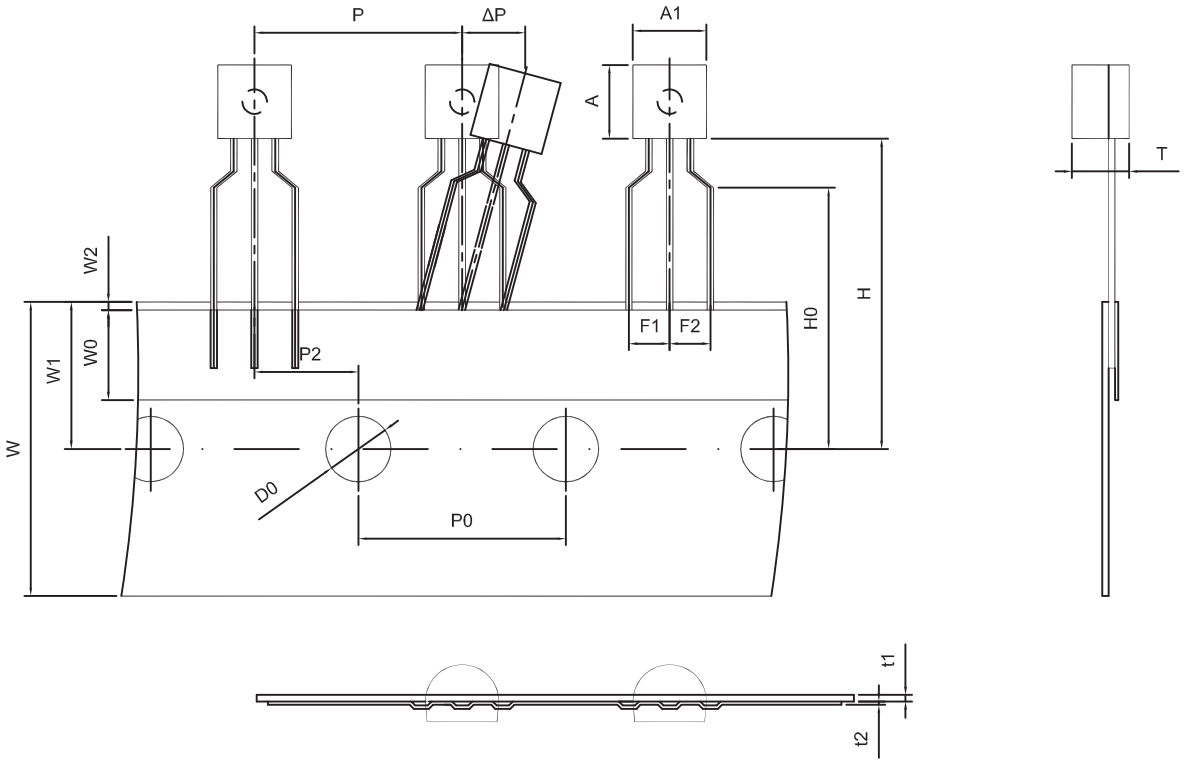

Dimiensions are in millimeter								
A1	A	T	P	P0	P2	F1	F2	W
4.5	4.5	3.5	12.7	12.7	6.35	2.5	2.5	18.0
W0	W1	W2	H	H0	D0	t1	t2	ΔP
6.0	9.0	1.0 MAX.	19.0	16.0	4.0	0.4	0.2	0

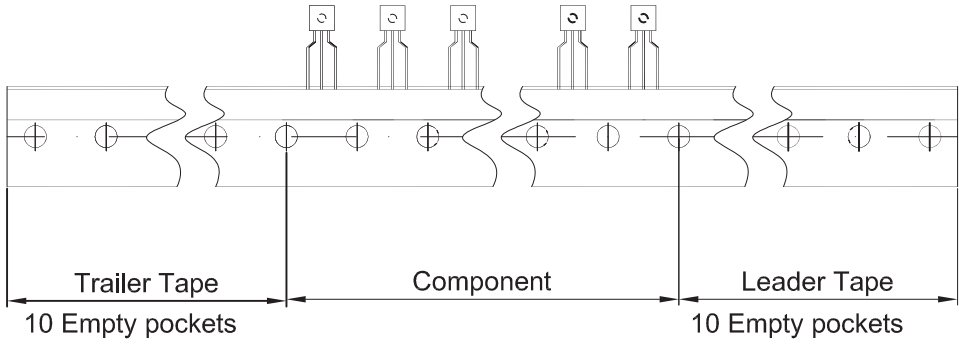

Package	Box	Box Size(mm)	Carton	Carton Size(mm)
TO-92	2000 pcs	333×162×43	20,000 pcs	350×340×250