CJ9460 Series

■ INTRODUCTION:

The CJ9460 is a current mode step-down converter. The device integrates a main switch and a synchronous rectifier for high efficiency without an external Schottky diode. It is ideal for applications such as the power supply unit of portable equipment. The output voltage can be regulated as low as 0.6V. The CJ9460 can also run at 92% duty cycle for low dropout operation, extending battery life in portable system. This device offers two operation modes, PWM control and PFM Mode switching control, which allows a high efficiency over the wider range of the load. The CJ9460 is offered in a low profile 6-pin, SOT package, and is available in an adjustable version.

■ FEATURES:

- High efficiency :Up to 96%
- 500kHz Constant Frequency Operation
- 2A Output Current
- No Schottky Diode Required
- 4.5V to 18V Input Voltage Range
- Output Voltage as Low as 0.6V
- Slope Compensated Current Mode Control for Excellent Line and Load Transient Response
- Integrated internal compensation
- Stable with Low ESR Ceramic Output Capacitors
- Over Current Protection with Hiccup-Mode
- Thermal Fault Protection
- Inrush Current Limit and Soft Start
- SOT-23-6L Package
- -40° C to +85° C Temperature Range

■ APPLICATIONS：

- Distributed Power Systems
- Digital Set Top Boxes
- Flat Panel Television and Monitors
- Wireless and DSL Modems
- Notebook Computer

■ PIN CONFIGURATION:

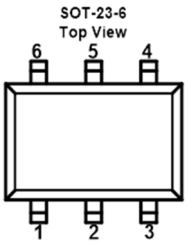

■ DEVICE INFORMATION:

PART NUMBER	PACKAGE
CJ9460T6	SOT-23-6L

Tabel1. Pin Description

PIN NUMBER	PIN NAME	FUNCTION
1	BS	Boostrap. A capacotpr connected between SW and BS pins is required to form a floating supply across the high-side switch driver.
2	V_{SS}	Analog ground pin.
3	FB	Adjustable version feedback input. Connect FB to the center point of the external resistor divider.
4	EN	Drive this pin to a logic-high to enable the IC Drive to a logic-low to disable the IC and enter micro-power shutdown mode.
5	VIN	Power supply Pin
6	SW	Switching Pin

■ ABSOLUTE MAXIMUM RATINGS(Note1)

PARAMETER		SYMBOL	RATINGS	UNITS
Input Voltage		V_{IN}	V_{SS}-0.3~V_{SS}+20	V
EN Voltages		V_{EN}	V_{SS}-0.3~V_{SS}+20	V
FB Voltage			V_{SS}-0.3~ V_{SS}+6	V
SW Voltage			V_{SS}-0.3~V_{IN}+0.5	V
BS Voltage			V_{SW}-0.3~V_{SW}+5	V
Power Dissipation	SOT-23-6L	P_D	400	mW
Thermal Resistance				
Operating Temperature		T_{opr}	-40~+85	℃
Junction Temperature		T_j (2)	150	℃
Storage Temperature		T_{stg}	-40~+125	℃
Soldering Temperature & Time		T_{solder}	260℃, 10s	
ESD HBM(Human Body Mode)		-	2	kV
ESD MM(Machine Mode)		-	200	V

1: Absolute Maximum Ratings are those values beyond which the life of a device may be impaired.

2: T_J is calculated from the ambient temperature T_A and power dissipation P_D according to the following formula: $T_J = T_A + (P_D) \times (170°C/W)$.

3:100% production test at +25°C. Specifications over the temperature range are guaranteed by design and characterization.

Electrical Characteristics

(V_{IN}=V_{EN}=12V, V_{OUT}=1.8V, T_A = 25°C, unless otherwise noted.)

PARAMETER	CONDITIONS	MIN	TYP	MAX	UNITS
Input Voltage		4.5		18	V
Supply Current in Operation	V_{EN}=2.0V, V_{FB}=1.1V		0.4	0.6	mA
Supply Current in Shutdown	V_{EN} =0 or V_{EN} = GND		1		μA
Regulated Feedback Voltage V_{FB}	T_A = 25℃ 4.5V≤ V_{IN} ≤18V	0.588	0.600	0.612	V
High-Side Switch On-Resistance			90		mΩ
Low-Side Switch On-Resistance			70		mΩ
High-Side Switch Leakage Current	V_{EN}=0V, V_{SW}=0V		0	10	μA
Upper Switch Current Limit	Minimum Duty Cycle		2.6		A
Oscillation Frequency			0.5		MHZ
Maximum Duty Cycle	V_{FB}=0.6V		92		%
Minimum On-Time			60		ns
Soft-Start Time	T_{SS}		4		ms
Thermal Shutdown			160		℃

■ TYPICAL APPLICATION CIRCUITS

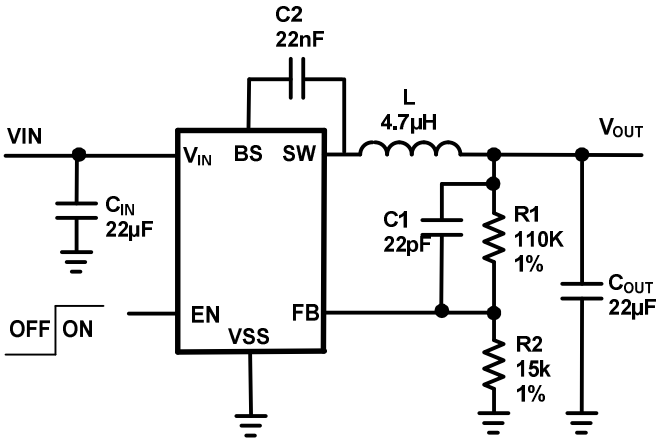

Figure1 Basic Application Circuit

Note: $V_{OUT} = V_{FB} \times \left(1 + \frac{R1}{R2}\right)$

When the input voltage exceeds 10V, please place a 5Ω or more resistor at the front of V_{IN} to prevent IC damage due to surge current caused by short to GND.

■ TYPICAL PERFORMANCE CHARACTERISTICS

(Test Figure1 above, unless otherwise specified)

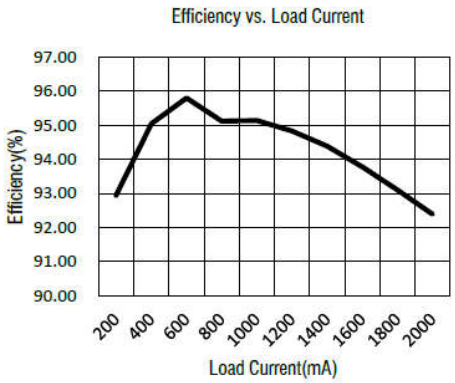

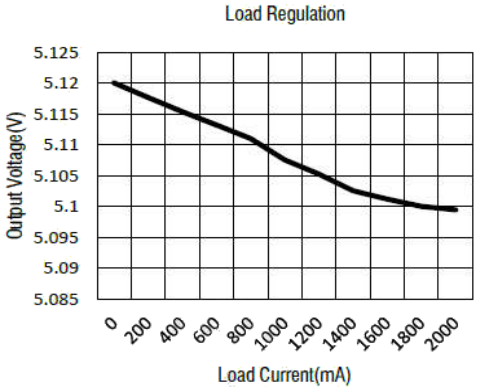

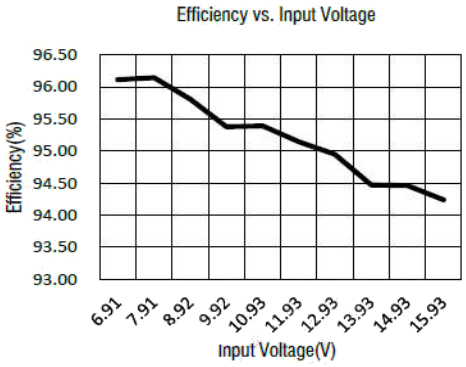

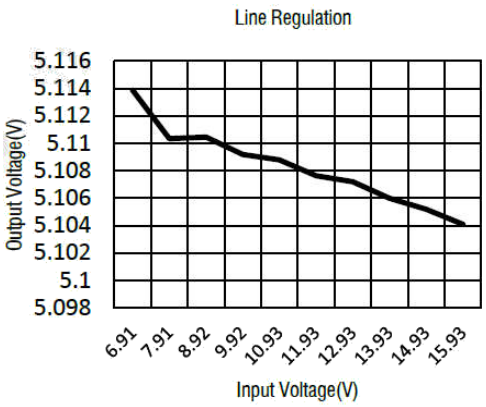

■ TYPICAL PERFORMANCE CHARACTERISTICS

(Test Figure1 above, unless otherwise specified)

PFM MODE (CH1:$V_{OUT(ripple)}$ CH2:V_{SW})

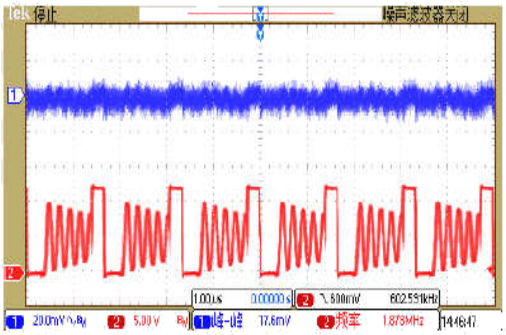

PWM MODE(CH1:$V_{OUT(ripple)}$ CH2:V_{SW})

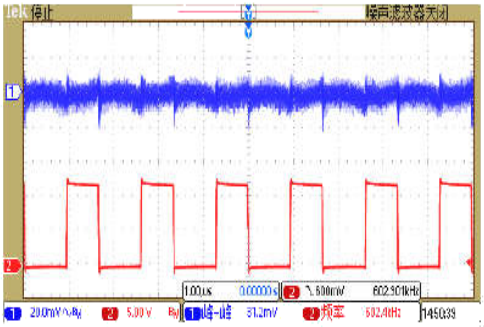

■ FUNCTIONAL BLOCK DIAGRAM

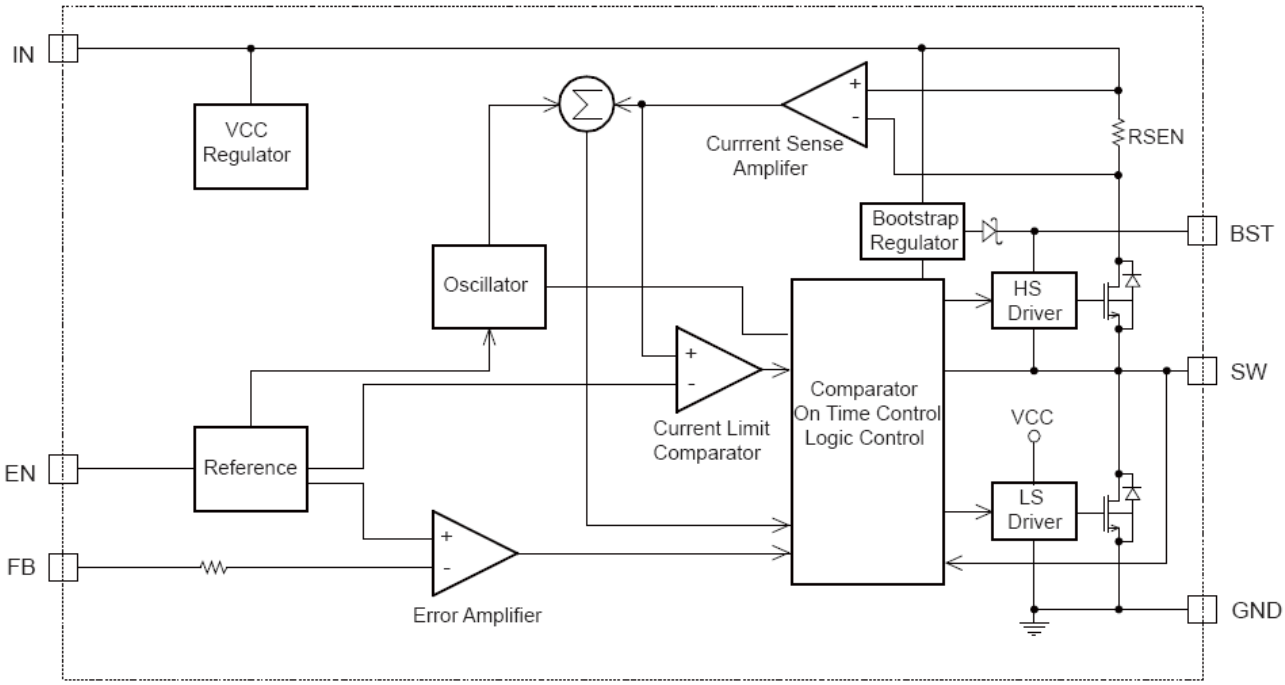

Figure2 Block Diagram

SOT-23-6L Package Outline Dimensions

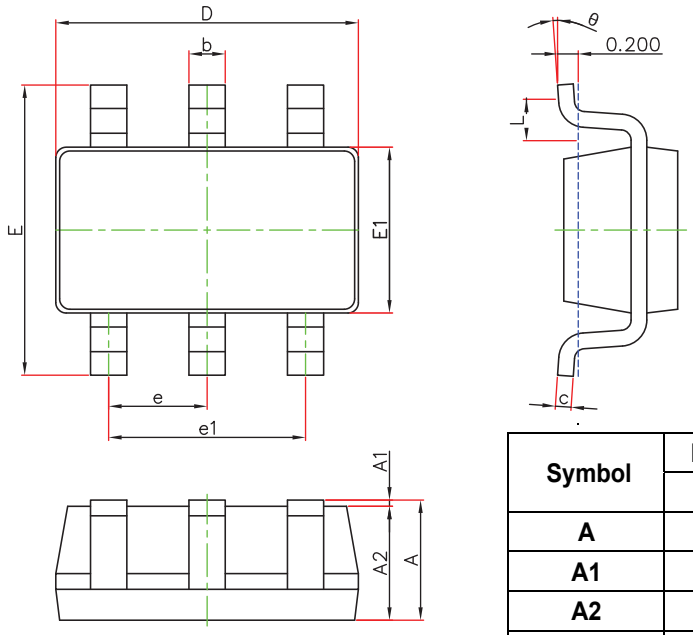

Symbol	Dimensions In Millimeters		Dimensions In Inches	
	Min	Max	Min	Max
A	1.050	1.250	0.041	0.049
A1	0.000	0.100	0.000	0.004
A2	1.050	1.150	0.041	0.045
b	0.300	0.500	0.012	0.020
c	0.100	0.200	0.004	0.008
D	2.820	3.020	0.111	0.119
E	2.650	2.950	0.104	0.116
E1	1.500	1.700	0.059	0.067
e	0.950(BSC)		0.037(BSC)	
e1	1.800	2.000	0.071	0.079
L	0.300	0.600	0.012	0.024
θ	0°	8°	0°	8°

SOT-23-6L Suggested Pad Layout

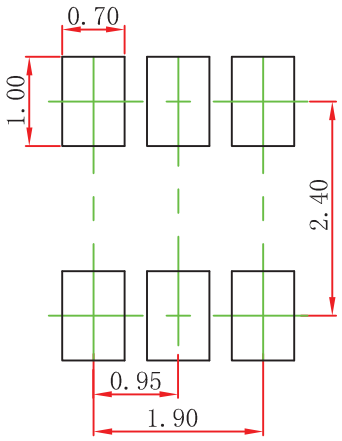

Note:
1.Controlling dimension:in millimeters.
2.General tolerance:± 0.05mm.
3.The pad layout is for reference purposes only.

DISCLAIMER

IMPORTANT NOTICE, PLEASE READ CAREFULLY

The information in this data sheet is intended to describe the operation and characteristics of our products. JSCJ has the right to make any modification, enhancement, improvement, correction or other changes to any content in this data sheet, including but not limited to specification parameters, circuit design and application information, without prior notice.

Any person who purchases or uses JSCJ products for design shall: 1. Select products suitable for circuit application and design; 2. Design, verify and test the rationality of circuit design; 3. Procedures to ensure that the design complies with relevant laws and regulations and the requirements of such laws and regulations. JSCJ makes no warranty or representation as to the accuracy or completeness of the information contained in this data sheet and assumes no responsibility for the application or use of any of the products described in this data sheet.

Without the written consent of JSCJ, this product shall not be used in occasions requiring high quality or high reliability, including but not limited to the following occasions: medical equipment, automotive electronics, military facilities and aerospace. JSCJ shall not be responsible for casualties or property losses caused by abnormal use or application of this product.

Official Website: www.jscj-elec.com

Copyright © JIANGSU CHANGJING ELECTRONICS TECHNOLOGY CO., LTD.