JIANGSU CHANGJING ELECTRONICS TECHNOLOGY CO., LTD

DB Plastic-Encapsulate Bridge Rectifier

DB151 THRU DB157 General Purpose Bridge Rectifier

Features

- $I_{F(AV)}$ 1.5A
- V_{RRM} 50V-1000V
- High surge current capability
- Glass passivated chip

DB

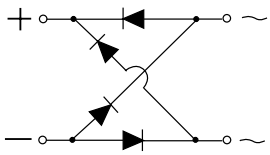

Applications

- General purpose 1 phase Bridge rectifier applications

Marking

- DB15X

  X：From 01 To 7

Limiting Values (Absolute Maximum Rating)

Item	Symbol	Unit	Conditions	DB1						
				51	52	53	54	55	56	57
Repetitive Peak Reverse Voltage	V_{RRM}	V		50	100	200	400	600	800	1000
Maximum RMS Voltage	V_{RMS}	V		35	70	140	280	420	560	700
Average Rectified Output Current	I_O	A	60Hz sine wave, R-load, Ta=25℃	1.5						
Surge(Non-repetitive)Forward Current	I_{FSM}	A	60H_Z half sine wave, 1 cycle, T_j=25℃	30						
Current Squared Time	I^2t	A^2S	1ms≤t<8.3ms Tj=25℃， Rating of per diode	3.7						
Storage Temperature	T_{stg}	℃		-55 ~+150						
Junction Temperature	T_j	℃		-55 ~+150						

Electrical Characteristics（T_a=25℃ Unless otherwise specified）

Item	Symbol	Unit	Test Condition	Max
Peak Forward Voltage	V_{FM}	V	I_{FM}=1.5A, Pulse measurement, Rating of per diode	1.1
Peak Reverse Current	I_{RRM}	μA	V_{RM}=V_{RRM} , Pulse measurement, Rating of per diode	10
Thermal Resistance	$R_{\theta J-A}$	℃/W	Between junction and ambient, On glass-epoxi substrate	68
	$R_{\theta J-L}$		Between junction and lead	15

Typical Characteristics

FIG.1: FORWARD CURRENT DERATING CURVE

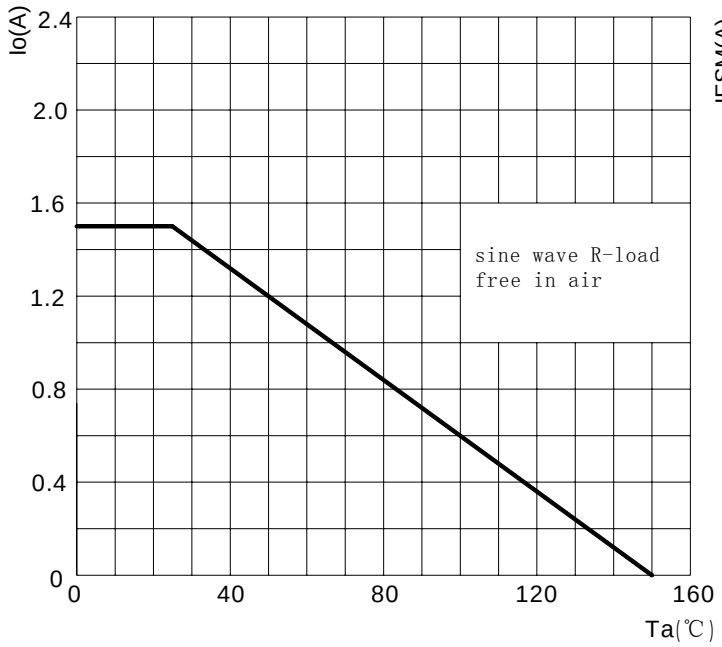

FIG.2: MAXIMUM NON-REPETITIVE FORWARD SURGE CURRENT

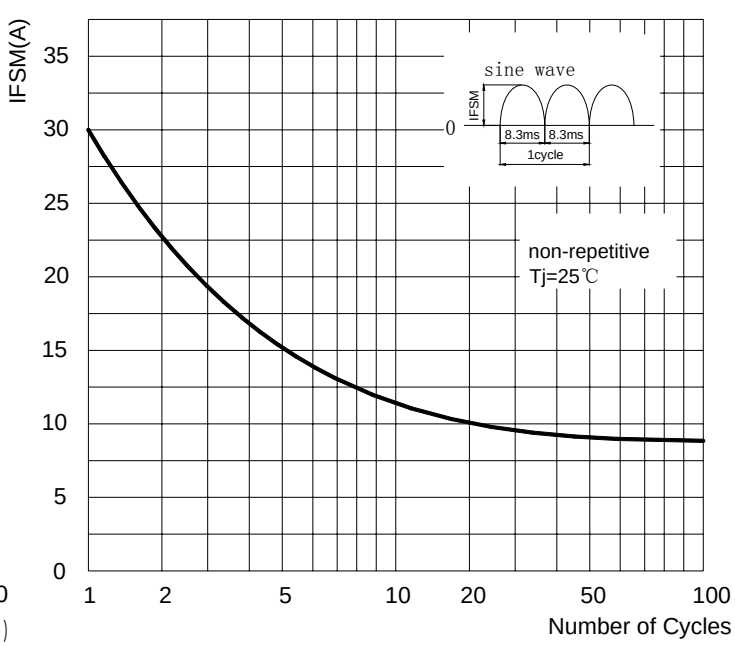

FIG.3: TYPICAL FORWARD CHARACTERISTICS

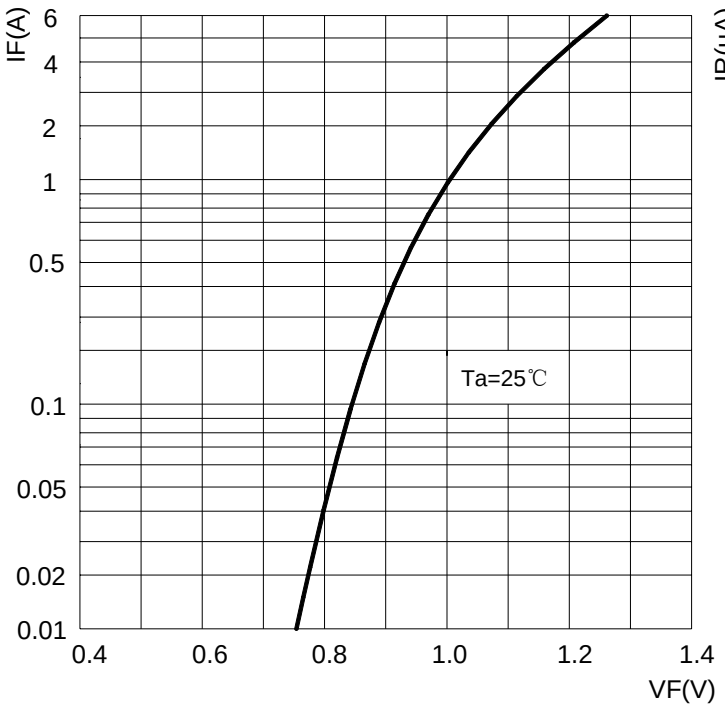

FIG.4:TYPICAL REVERSE CHARACTERISTICS

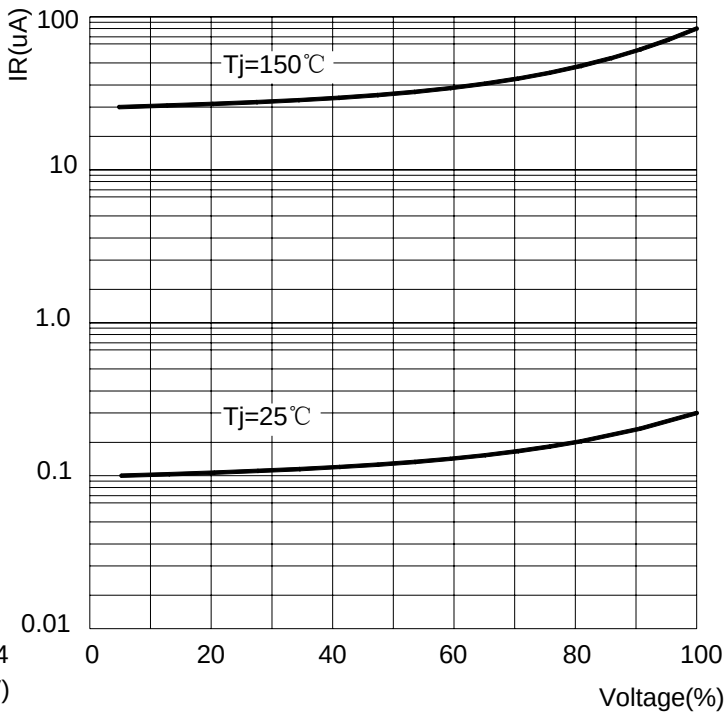

DB Package Outline Dimensions

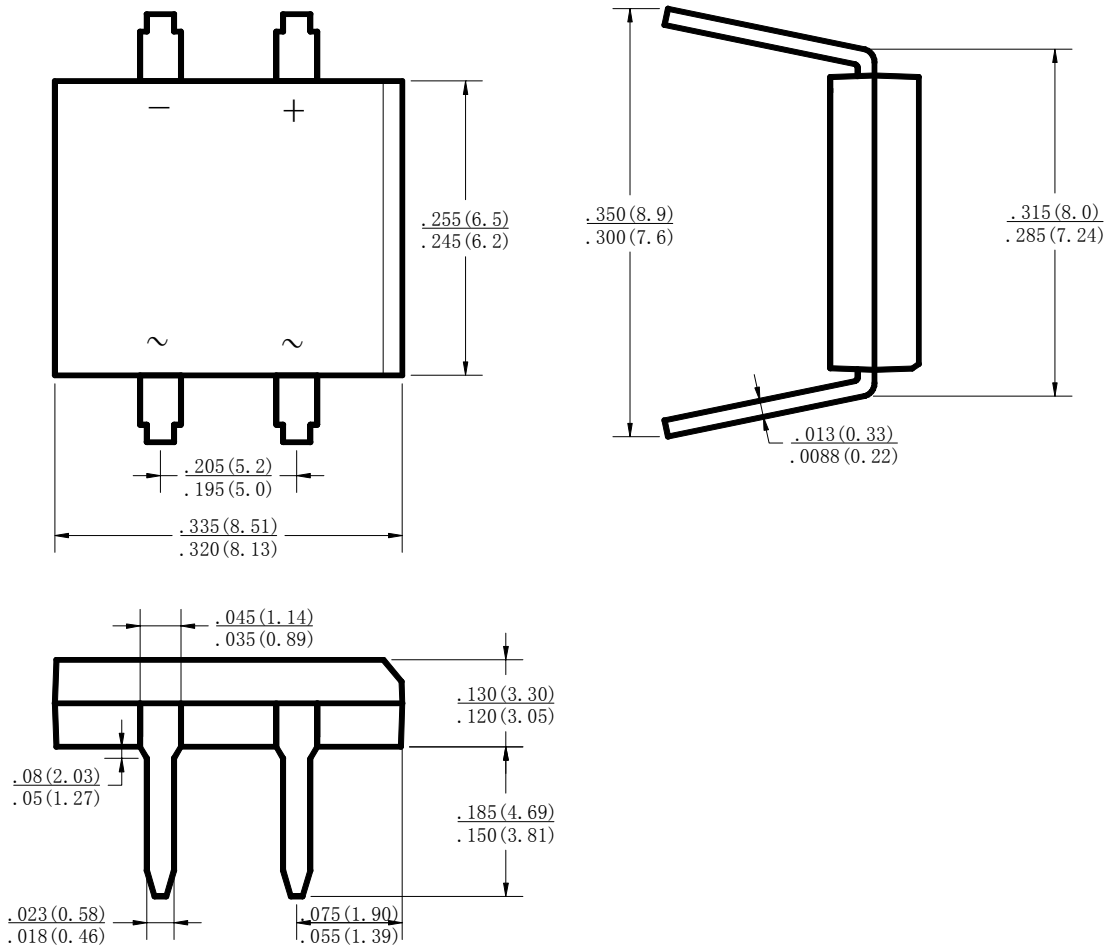

Dimensions in inches and (millimeters)

NOTICE

JSCJ reserves the right to make modifications,enhancements,improvements,corrections or other changes without further notice to any product herein.JSCJ does not assume any liability arising out of the application or use of any product described herein.