JIANGSU CHANGJING ELECTRONICS TECHNOLOGY CO., LTD

TO-252-2L Plastic-Encapsulate Diodes

MBRD20100CT SCHOTTKY BARRIER RECTIFIER

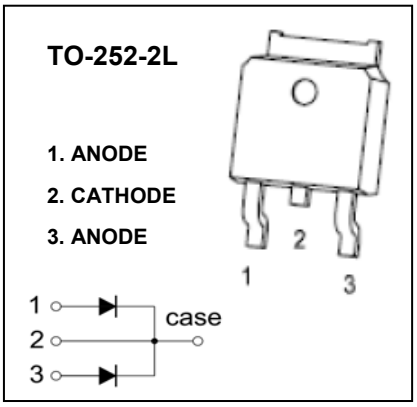

FEATURES

- Schottky Barrier Chip
- Guard Ring Die Construction for Transient Protection
- Low Power Loss,High Efficiency
- High Surge Capability
- High Current Capability and Low Forward Voltage Drop
- For Use in Low Voltage, High Frequency Inverters,Free Wheeling, and Polarity Protection Applications

MAXIMUM RATINGS (T_a=25℃ unless otherwise noted)

Symbol	Parameter	Value	Unit
V_{RRM}	Peak repetitive reverse voltage	100	V
V_{RWM}	Working peak reverse voltage		
V_R	DC blocking voltage		
$V_{R(RMS)}$	RMS reverse voltage	70	V
I_O	Average rectified output current@ T_c=125℃	20	A
I_{FSM}	Non-Repetitive peak forward surge current 8.3ms half sine wave	120	A
P_D	Power dissipation	1.25	W
$R_{\Theta JA}$	Thermal resistance from junction to ambient	80	℃/W
T_j	Junction temperature	125	℃
T_{stg}	Storage temperature	-55~+150	℃

ELECTRICAL CHARACTERISTICS (T_a=25℃ unless otherwise specified)

Parameter	Symbol	Test conditions	Min	Typ	Max	Unit
Reverse voltage	$V_{(BR)}$	I_R=1mA	100			V
Reverse current	I_R	V_R=100V			0.1	mA
Forward voltage	V_{F1}	I_{F1}=10A			1	V
Forward voltage	V_{F2*}	I_{F2}=20A			1.2	V

*Pulse test

Typical Characteristics

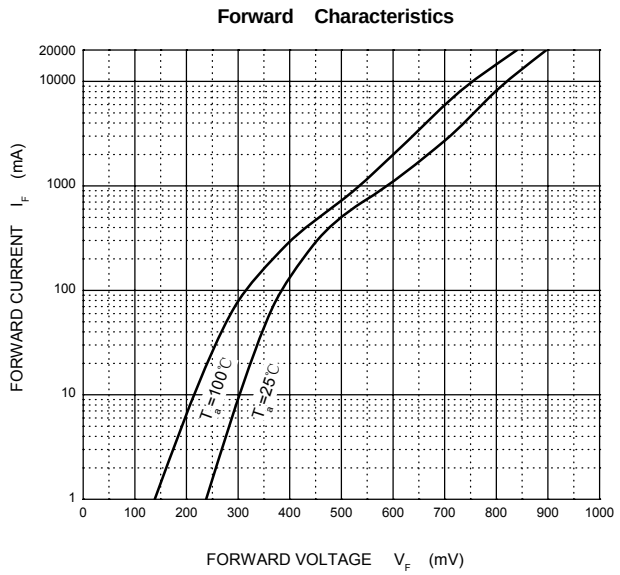

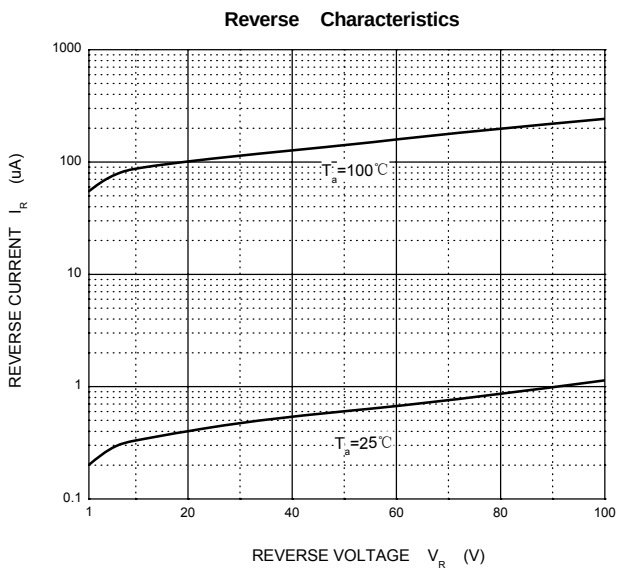

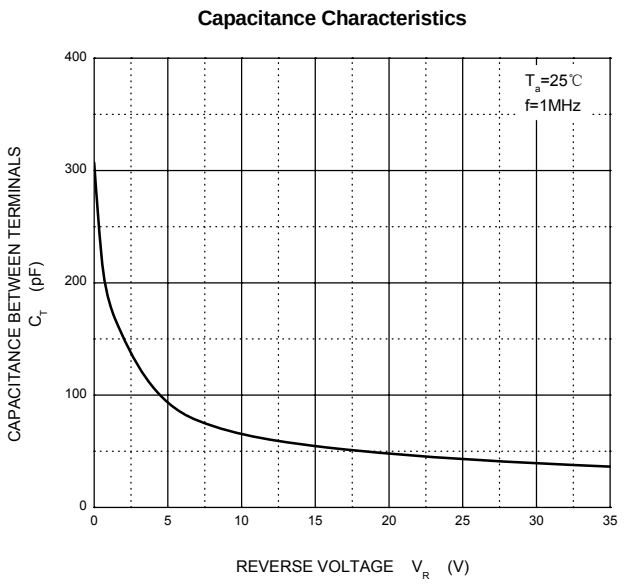

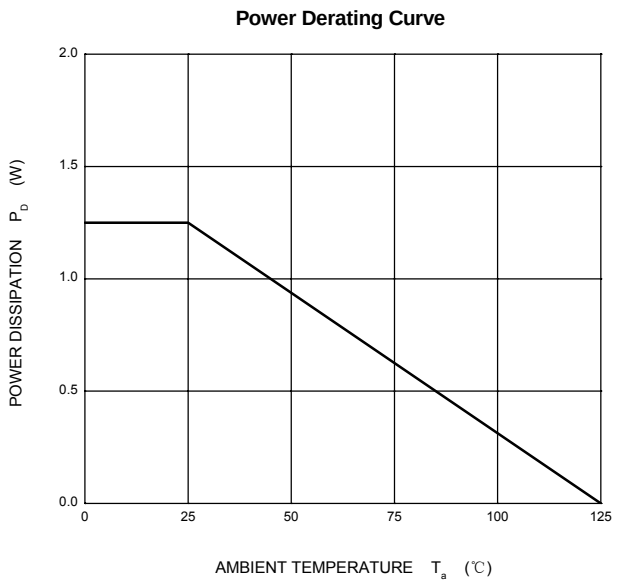

TO-252(4R)-2L Package Outline Dimensions

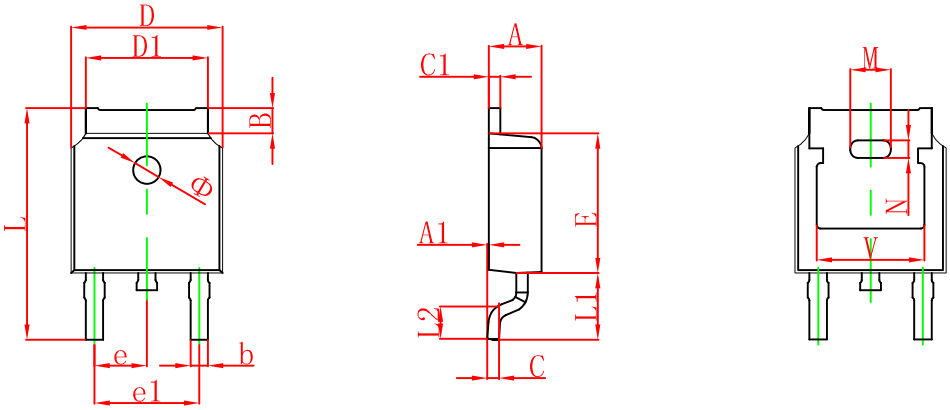

Symbol	Dimensions In Millimeters		Dimensions In Inches	
	Min.	Max.	Min.	Max.
A	2.200	2.380	0.087	0.094
A1	0.000	0.100	0.000	0.004
B	0.800	1.400	0.031	0.055
b	0.710	0.810	0.028	0.032
c	0.460	0.560	0.018	0.022
c1	0.460	0.560	0.018	0.022
D	6.500	6.700	0.256	0.264
D1	5.130	5.460	0.202	0.215
E	6.000	6.200	0.236	0.244
e	2.286 TYP.		0.090 TYP.	
e1	4.327	4.727	0.170	0.186
M	1.778REF.		0.070REF.	
N	0.762REF.		0.018REF.	
L	9.800	10.400	0.386	0.409
L1	2.9REF.		0.114REF.	
L2	1.400	1.700	0.055	0.067
V	4.830 REF.		0.190 REF.	
Φ	1.100	1.300	0.043	0.051

TO-252(4R)-2L Suggested Pad Layout

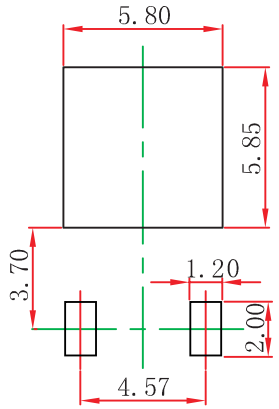

Note:
1.Controlling dimension:in millimeters.
2.General tolerance:± 0.05mm.
3.The pad layout is for reference purposes only.

NOTICE
JSCJ reserves the right to make modifications,enhancements,improvements,corrections or other changes without further notice to any product herein. JSCJ does not assume any liability arising out of the application or use of any product described herein.

TO-252 Embossed Carrier Tape

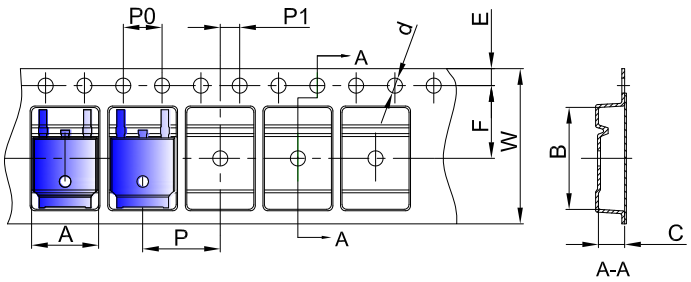

Packaging Description:

TO-252 parts are shipped in tape. The carrier tape is made from a dissipative (carbon filled) polycarbonate resin. The cover tape is a multilayer film (Heat Activated Adhesive in nature) primarily composed of polyester film, adhesive layer, sealant, and anti-static sprayed agent. These reeled parts in standard option are shipped with 25,00 units per 13" or 33.0 cm diameter reel. The reels are clear in color and is made of polystyrene plastic (anti-static coated).

Dimensions are in millimeter										
Pkg type	A	B	C	d	E	F	P0	P	P1	W
TO-252	6.90	10.50	2.70	Ø1.55	1.75	7.50	4.00	8.00	2.00	16.00

TO-252 Tape Leader and Trailer

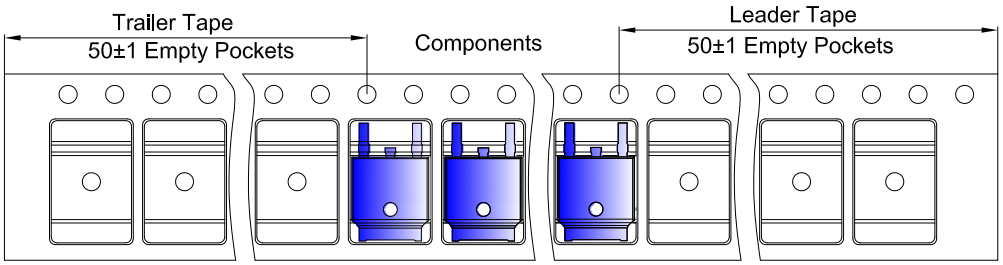

TO-252 Reel

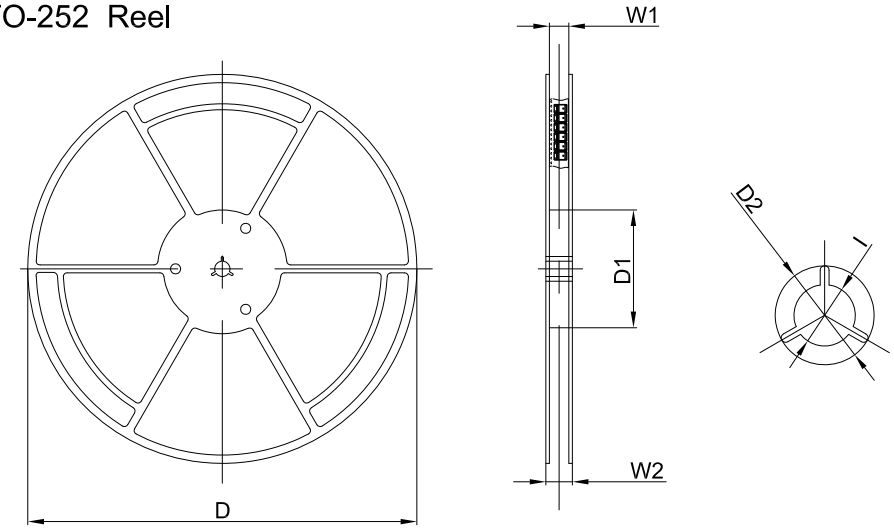

Dimensions are in millimeter						
Reel Option	D	D1	D2	W1	W2	I
13"Dia	330.00	100.00	Ø21.00	16.40	21.00	Ø13.00

REEL	Reel Size	Box	Box Size(mm)	Carton	Carton Size(mm)	G.W.(kg)
2,500 pcs	13inch	2,500 pcs	340×336×29	25,000 pcs	353×346×365	