JIANGSU CHANGJING ELECTRONICS TECHNOLOGY CO., LTD

1.5A Adjustable Three-terminal Positive Voltage Regulator

LM317

1 Introduction

LM317 is a three terminal positive voltage regulator with maximum 1.5A current output and adjustable output. The voltage regulator is very easy to use, which only needs two external resistors to set the output voltage, and the output voltage can be set in the range of 1.2V to 37V. In addition, the LM317 is also designed to integrate internal current limiting, thermal shutdown and safe working area compensation, which makes it relatively difficult to damage and basically prevent the burning of circuit fuses.

LM317 serves a variety of applications, including local voltage stabilization and card voltage stabilization. It can also be used to make a programmable voltage regulator, or as a precision current regulator by connecting a fixed resistance between the adjustment point and the output.

2 Applications

- Base Station
- Desktop Computer
- Ethernet Switch, Public Server, Private Switch (PBX)
- IP Telephone: Wired and Wireless
- Motor Control Refrigerator, Air Conditioner, Washing Machine
- Security Camera, Digital Sign
- Signal or Waveform Generator
- Substation Control, Power Quality Meter

3 Features

- The output current exceeds 1.5A
- The output is adjustable from 1.2 V to 37 V
- Internal thermal overload protection
- Temperature independent internal short circuit current limit
- Output transistor safe working area compensation
- Commonly used TO-252 package, as well as other forms of three pin package
- Avoid preparing multiple fixed voltages

4 Available Package

PART NUMBER	PACKAGE
LM317	SOT-223
	TO-220-3L
	TO-252-2L
	TO-263-2L

Note: For more detailed packaging information, see the part *Pin Configuration and Function* and the part *Mechanical Information*.

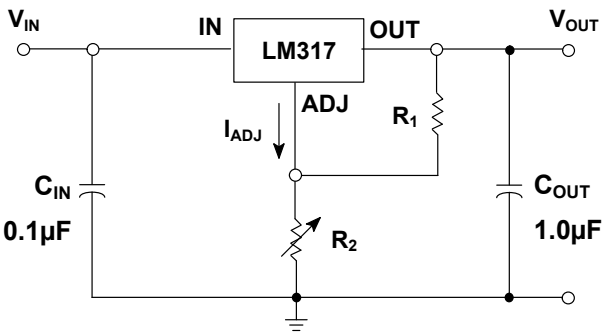

Figure 2-1. Typical Application Circuits

5 Orderable Information

MODEL	DEVICE	PACKAGE	OP T_J	ECO PLAN	MSL	PACKING OPTION	SORT
LM317	-	SOT-223	-40 ~ 125°C	RoHS & Green	Level 3 168 HR	Tape and Reel 2500 Units / Reel	Normal
	-	TO-220-3L	-40 ~ 125°C	RoHS & Green	Level 3 168 HR	Tube 50 Units / Rail	Normal
	-	TO-220-3L	-40 ~ 125°C	RoHS & non Green	Level 3 168 HR	Tube 50 Units / Rail	NoRD
	-	TO-252-2L	-40 ~ 125°C	RoHS & Green	Level 3 168 HR	Tape and Reel 2500 Units / Reel	Normal
	-	TO-252-2L	-40 ~ 125°C	RoHS & non Green	Level 3 168 HR	Tape and Reel 2500 Units / Reel	NoRD
	-	TO-263-2L	-40 ~ 125°C	RoHS & Green	Level 3 168 HR	Tape and Reel 800 Units / Reel	Normal
	-	TO-263-2L	-40 ~ 125°C	RoHS & non Green	Level 3 168 HR	Tape and Reel 800 Units / Reel	NoRD
Others	-	-	-	-	-	-	Customized

Note:

ECO PLAN: For the RoHS and Green certification standards of this product, please refer to the official report provided by JSCJ.

MSL: Moisture Sensitivity Level. Determined according to JEDEC industry standard classification.

SORT: Specifically defined as follows:

Active: Recommended for new products;

Customized: Products manufactured to meet the specific needs of customers;

Preview: The device has been released and has not been fully mass produced. The sample may or may not be available;

NoRD: It is not recommended to use the device for new design. The device is only produced for the needs of existing customers;

Obsolete: The device has been discontinued.

6 Pin Configuration and Marking Information

6.1 Pin Configuration and Function

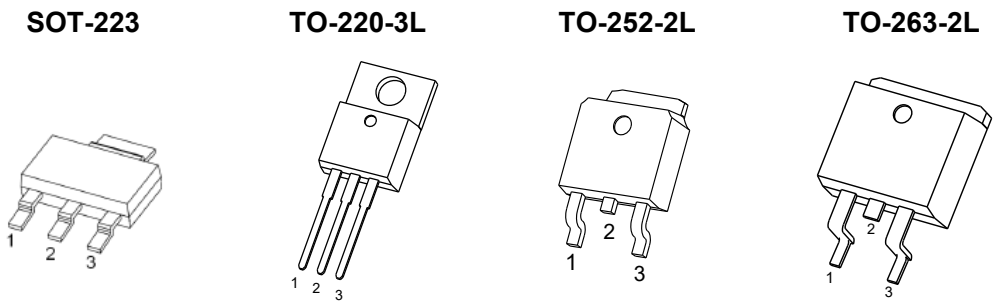

Figure 6-1. Package Top View

PIN NAME	LM317 Package Configuration and Function				I / O	DESCRIPTION
	SOT-223	TO-220-3L	TO-252-2L	TO-263-2L		
IN	3	3	3	3	I	Supply input pin.
ADJ	1	1	1	1	-	Adjustment pin. Connect to a resistor divider to set V_{OUT}.
OUT	2	2	2	2	O	Voltage output pin.

6.2 Marking Information

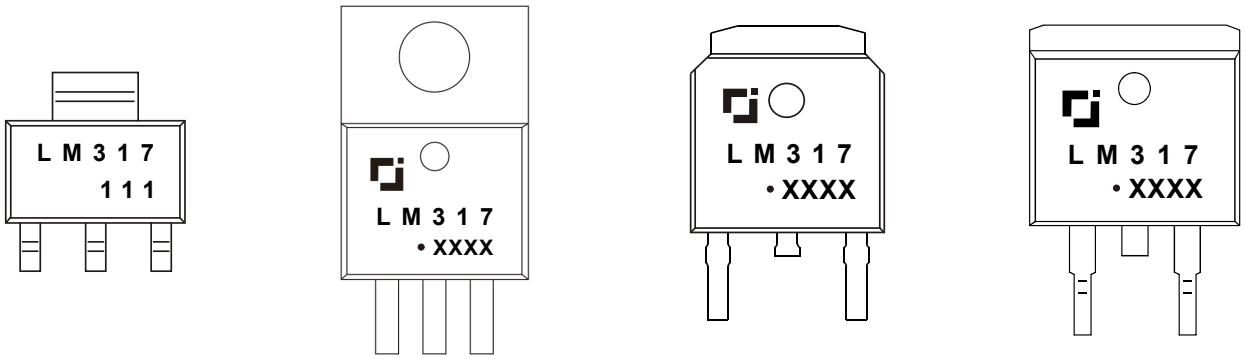

SOT-223 **TO-220-3L** **TO-252-2L** **TO-263-2L**

"LM317" : Device number.
"111" : Fixed code.
"XXXX" : Code.
" • " : Green molding compound device. If none, the normal device.

7 Specifications

7.1 Absolute Maximum Ratings(1)

(over operating free-air temperature range, unless otherwise specified)

CHARACTERISTIC			SYMBOL	VALUE	UNITS
Maximum Input-to-output differential voltage			V_{IN} - V_{OUT}	40	V
Programmable output voltage range			V_{OUT}	1.2 ~ 37	
Maximum power dissipation	LM317	SOT-223	$P_{D\ Max}$	Internally Limited(2)	W
		TO-220-3L			
		TO-252-2L			
		TO-263-2L			
Maximum junction temperature			$T_{J\ Max}$	150	°C
Storage temperature			T_{stg}	-55 ~ 150	°C
Soldering temperature			T_{solder}	230°C	-

(1) Stresses beyond those listed under *Absolute Maximum Ratings* may cause permanent damage to the device. These are stress ratings only, which do not imply functional operation of the device at these or any other conditions beyond those indicated under *Recommended Operating Conditions*. Exposure to absolute maximum rated conditions for extended periods may affect device reliability.
(2) Refer to *Thermal Information* for details.

7.2 Recommended Operating Conditions(3)

PARAMETER	SYMBOL	MIN.	NOM.	MAX.	UNIT
Input-to-output differential voltage	V_{IN} - V_{OUT}	3.0	-	40	V
Programmable output voltage	V_{OUT}	1.2	-	37	V
Output current range	I_{OUT}	0.01	-	1.5	A
Operating junction temperature	T_J	-40	-	125	°C
Operating ambient temperature	T_A	-	-(4)	-	°C

(3) CJ recommends that users should not exceed the rated value in the *Recommended Operating Conditions* for the application conditions of the equipment, so as to ensure the stability of normal operation and reliability of long-term operation of the equipment. Operation beyond the recommended rated conditions does not mean that the product will fail. The consumers need to evaluate the risks that may be caused by the operation of the product beyond the recommended rated conditions.
(4) It is necessary to ensure that the operating junction temperature of the equipment does not exceed the rated value of the recommended operating conditions when using the device for design.

7 Specifications

7.3 ESD Ratings

ESD RATINGS		SYMBOL	VALUE	UNIT
Electrostatic discharge(5)	Human body model	$V_{ESD-HBM}$	2000	V
	Machine model	V_{ESD-MM}	200	

(5) ESD testing is conducted in accordance with the relevant specifications formulated by the Joint Electronic Equipment Engineering Commission (JEDEC). The human body mode (HBM) electrostatic discharge test is based on the JESD22-114D test standard, using a 100pF capacitor and discharging to each pin of the device through a resistance of 1.5kΩ. The electrostatic discharge test in mechanical mode (MM) is based on the JESD22-115-A test standard and uses a 200pF capacitor to discharge directly to each pin of the device.

7.4 Thermal Information

THERMAL METRIC(6)	SYMBOL	LM317		UNIT
Junction-to-ambient thermal resistance	$R_{\Theta JA}$	**SOT-223**	**TO-220-3L**	°C/W
		100.0	66.7	
		TO-252-2L	**TO-263-2L**	
		80.0	62.5	
Reference maximum power dissipation for continuous operation	$P_{D\ Ref}$	**SOT-223**	**TO-220-3L**	W
		1.00	1.50	
		TO-252-2L	**TO-263-2L**	
		1.25	1.60	

(7) T_A = 25°C, the thermal resistance test of TO-220-3L packages did not add additional radiators, see the part *Notes* for more information about thermal metrics.

7 Specifications

7.5 Electrical Characteristics

LM317 (V_{IN} - V_{OUT} = 5.0V, I_{OUT} = 500mA, C_{IN} = 1.0μF, C_{OUT} = 1.0μF, unless otherwise specified)

CHARACTERISTIC	SYMBOL	TEST CONDITIONS[8]			MIN.	TYP.	MAX.	UNIT
Line regulation	LNR[9]	V_{IN} - V_{OUT} = 3.0 to 40V		T_J = 25°C	-	0.01	0.04	%/V
				T_J = 0 to 125°C	-	0.02	0.07	
Load regulation	LDR	I_{OUT} = 10 to 1500mA	V_{OUT} < 5.0V	T_J = 25°C	-	18	25	mV
				T_J = 0 to 125°C	-	40	70	
			V_{OUT} ≥ 5.0V	T_J = 25°C	-	0.4	0.5	%·V_{OUT}
				T_J = 0 to 125°C	-	0.8	1.5	
ADJUST terminal current	I_{ADJ}	-		T_J = 25°C	-	46	100	μA
Change in ADJUST terminal current	ΔI_{ADJ}	V_{IN} - V_{OUT} = 3.0 to 40V I_{OUT} = 10 to 1500mA		T_J = 25°C	-	2.0	5.0	μA
Reference voltage	V_{REF}	V_{IN} - V_{OUT} = 3.0 to 40V I_{OUT} = 10 to 1500mA		T_J = 25°C	1.20	1.25	1.30	V
Output voltage temperature stability	ΔV_{OUT} / V_{OUT}	-		-	-	0.7	-	%
Temperature Coefficient of Output Voltage	ΔV_{OUT} / ΔT	-		-	-	±0.02	-	% / °C
Minimum load current to maintain regulation	$I_{OUT\ MIN}$	V_{IN} - V_{OUT} = 40V		T_J = 0 to 125°C	-	3.5	12	mA
Maximum output current	$I_{OUT\ MAX}$	V_{IN} - V_{OUT} ≤ 15V		T_J = 0 to 125°C	1.0	2.2	-	A
		V_{IN} - V_{OUT} = 40V		T_J = 25°C	-	0.3	-	
Output noise voltage (percentage of V_{OUT})	eN	f = 10 to 10kHz		T_J = 25°C	-	0.003	0.010	%·V_{OUT}
Ripple rejection	RR	V_{IN} - V_{OUT} = ($5.0V_{DC}$ ± $1.0V_{PP\ AC}$), f = 120Hz	C_{ADJ}[10] = 0μF	T_A = 25°C	-	60	-	dB
			C_{ADJ}[10] = 10μF		66	75	-	
Long-term stability	ST	per 1k hours		T_J = 125°C	-	0.3	1.0	%

7 Specifications

7.5 Electrical Characteristics (continued)

Note:

(8) Pulse testing techniques are used to maintain the junction temperature as close to the ambient temperature as possible.

(9) The line regulation is calculated by the following formula:

$$LNR = \frac{\Delta V_{OUT}}{V_{OUT} \times \Delta V_{IN}}$$

where, ΔV_{OUT} is the variation of the output voltage, ΔV_{IN} is the variation of the input voltage.

(10) C_{ADJ} is connected between the ADJ terminal and GND.

7.6 Typical Characteristics

LM317 (C_{IN} = 0.1μF, C_{OUT} = 1.0μF, unless otherwise specified)

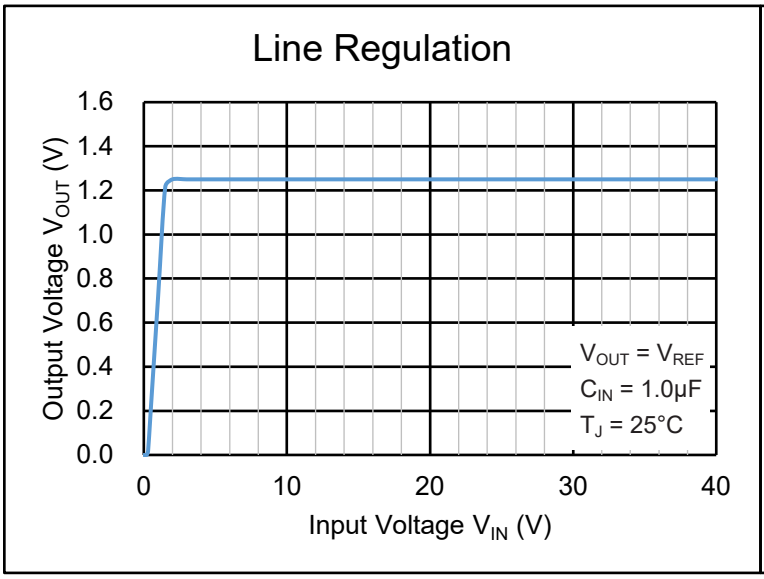

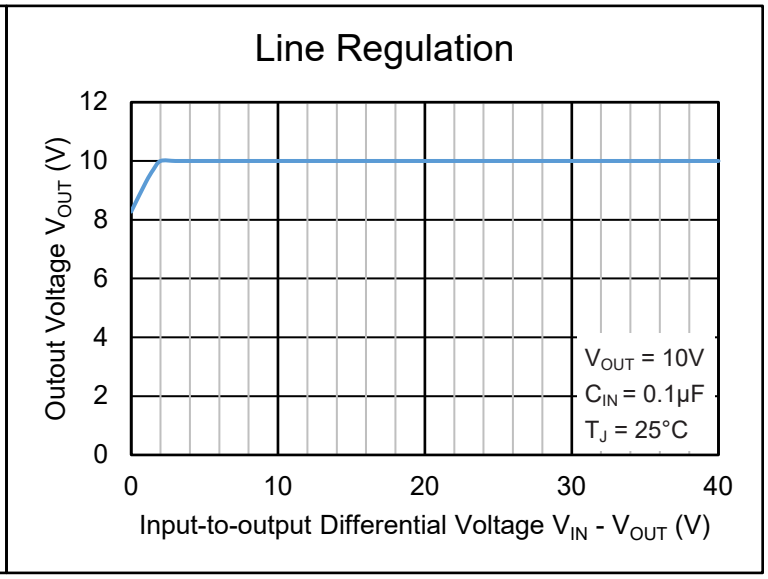

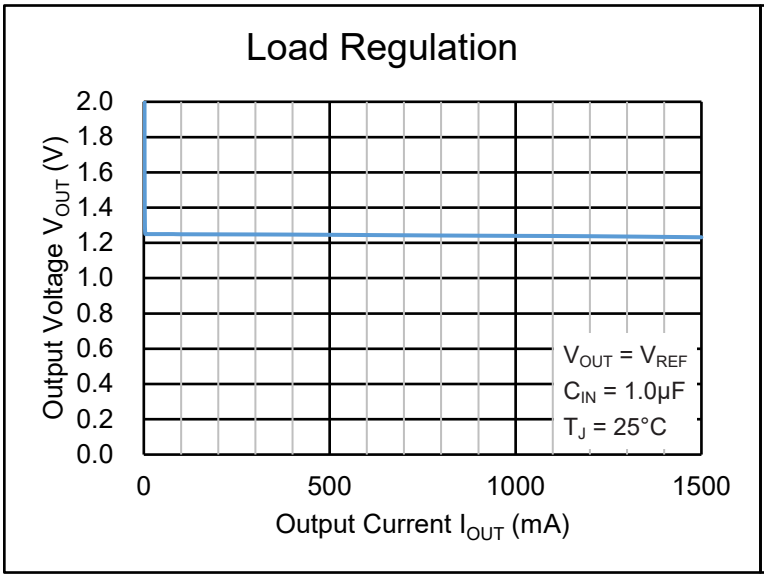

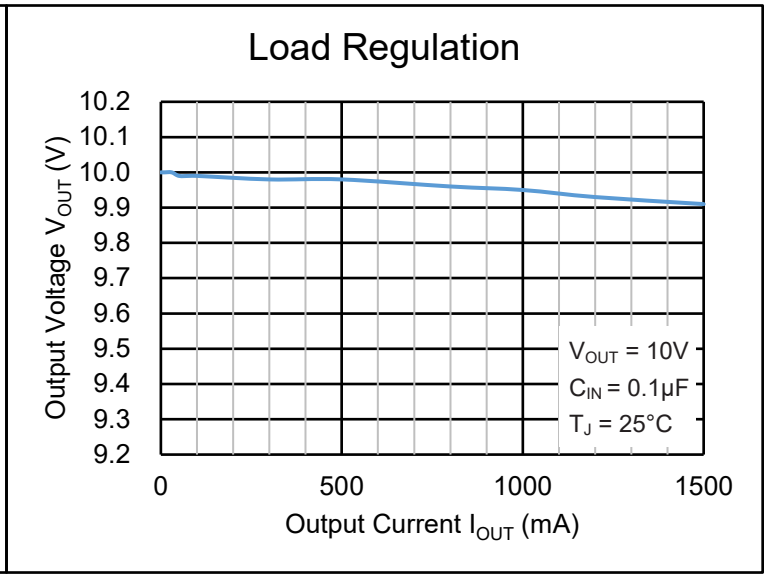

7 Specifications

7.6 Typical Characteristics (continued)

LM317 (C_{IN} = 0.1μF, C_{OUT} = 1.0μF, unless otherwise specified)

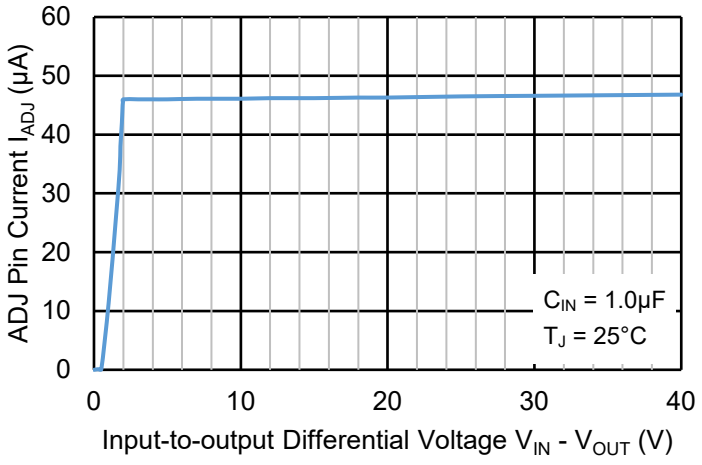

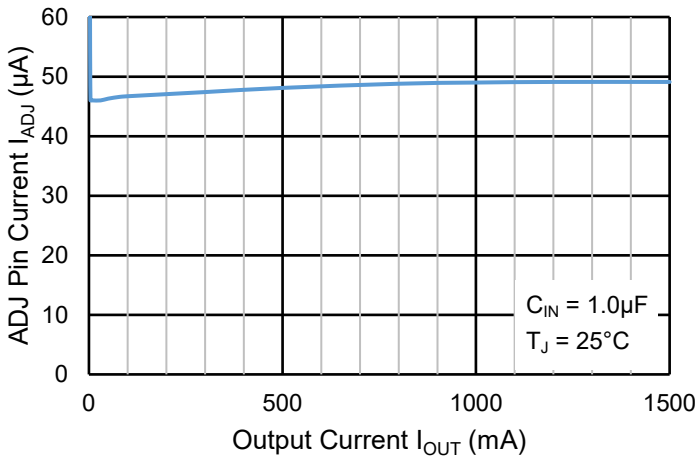

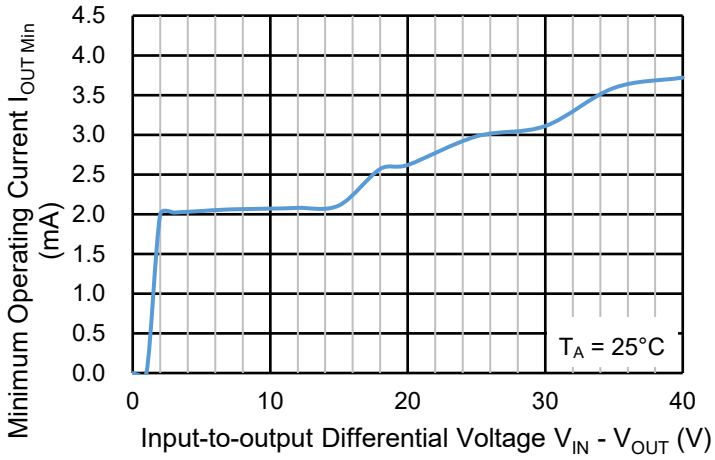

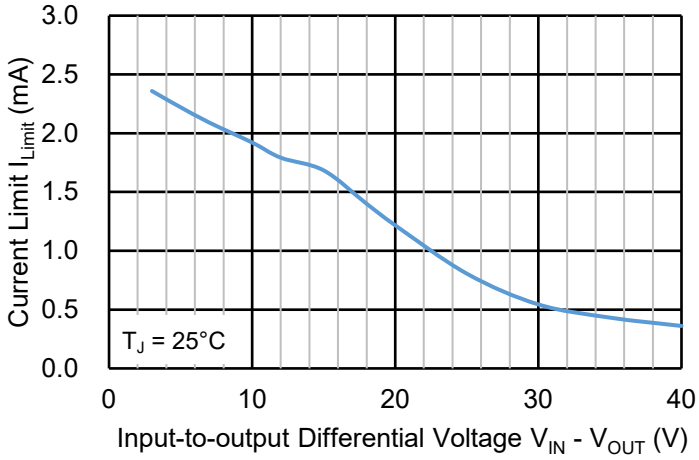

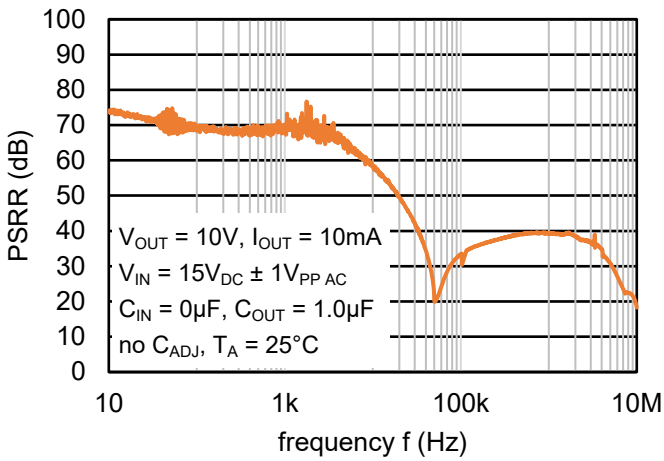

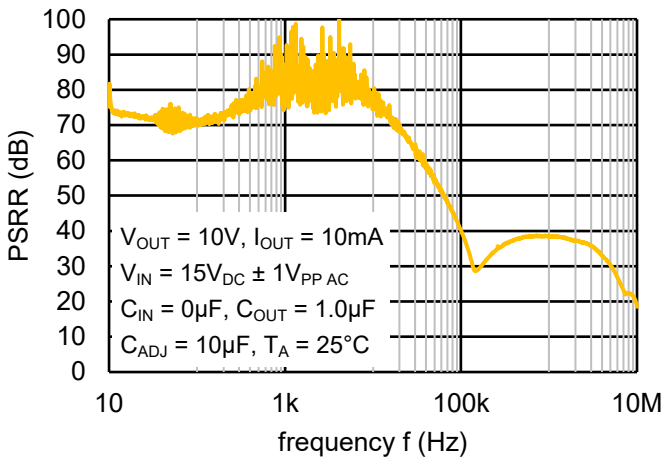

7 Specifications

7.6 Typical Characteristics (continued)

LM317 (C_{IN} = 0.1μF, C_{OUT} = 1.0μF, unless otherwise specified)

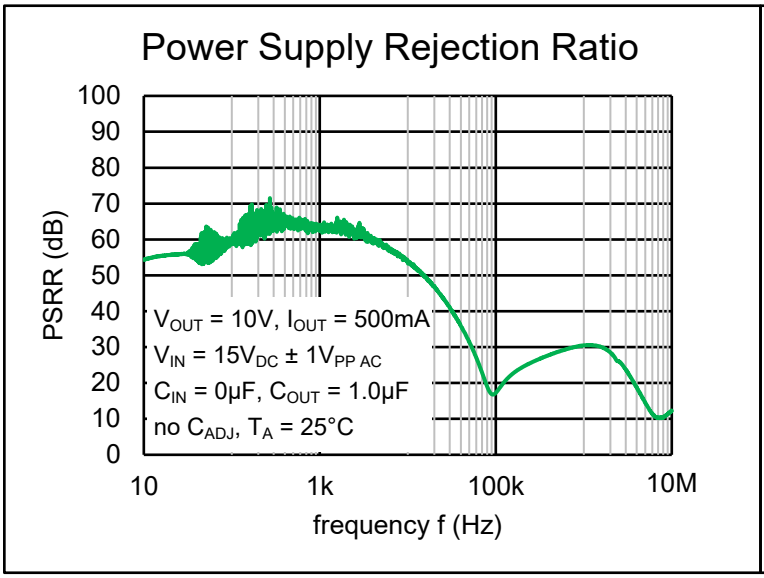

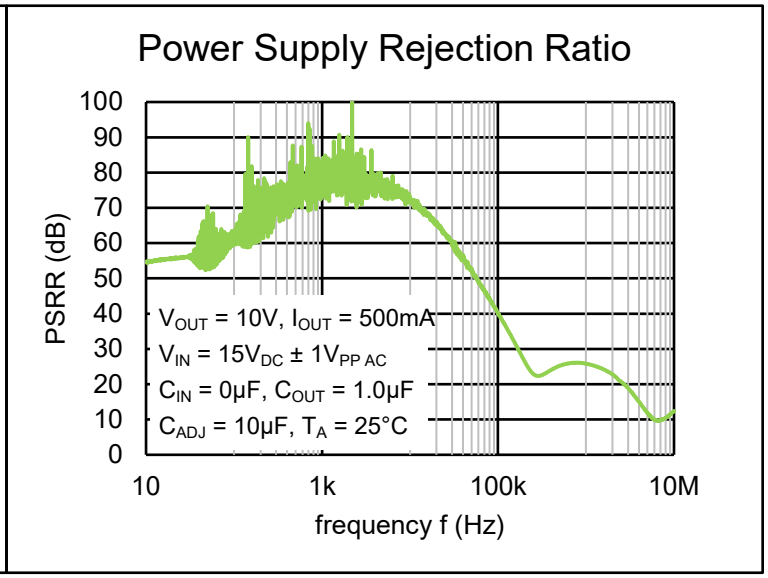

Power on

V_{OUT} = 10V, V_{IN} = 15V, CH_1: V_{IN}, CH_2: V_{OUT}

I_{OUT} = 10mA, no C_{ADJ}

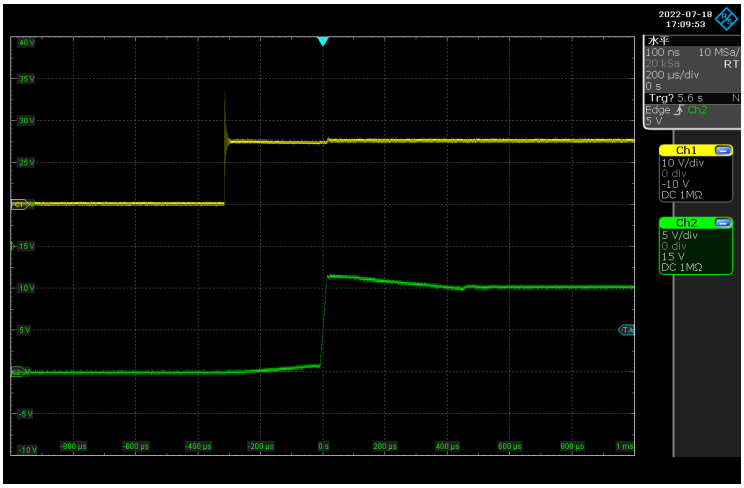

I_{OUT} = 10mA, C_{ADJ} = 10μF

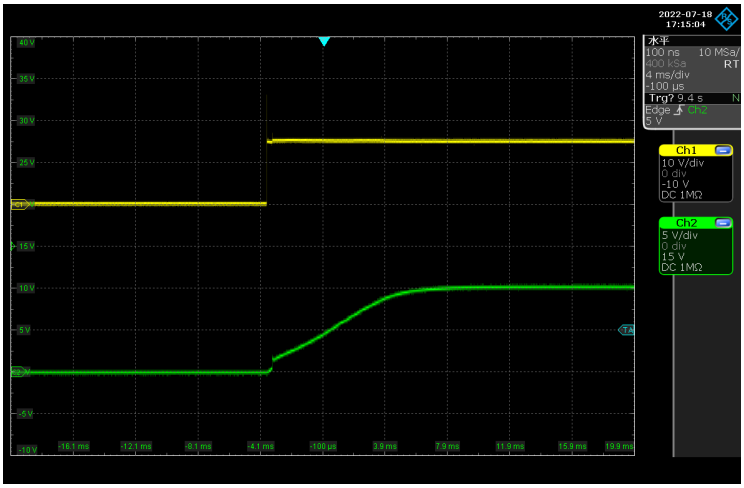

I_{OUT} = 1000mA, no C_{ADJ}

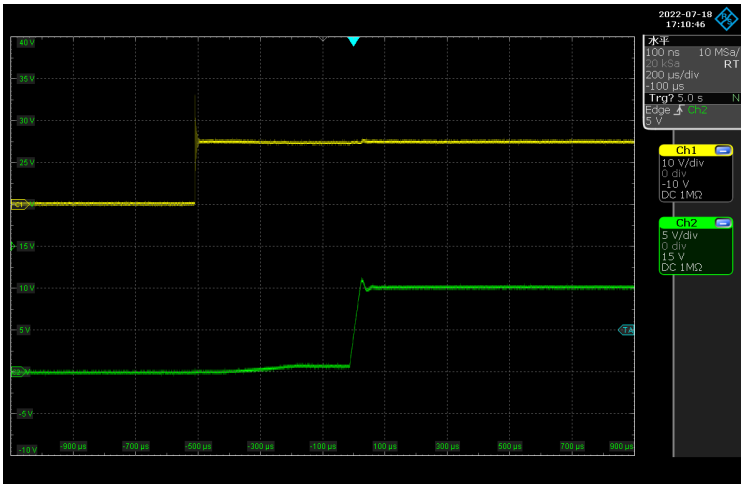

I_{OUT} = 1000mA, C_{ADJ} = 10μF

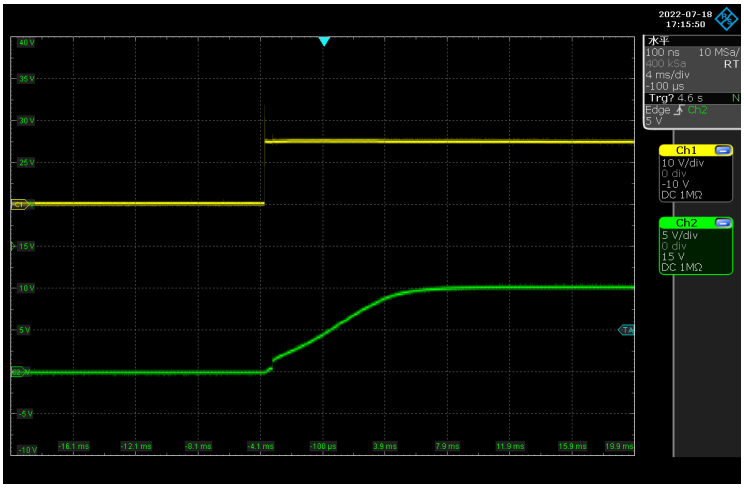

7 Specifications

7.6 Typical Characteristics (continued)

Load Transient Response

C_{IN} = 0.1μF, C_{OUT} = 1.0μF, V_{OUT} = 10V, V_{IN} = 15V, I_{OUT} = 10 to 1000mA, CH_2: V_{OUT}, CH_4: I_{OUT}

no C_{ADJ}

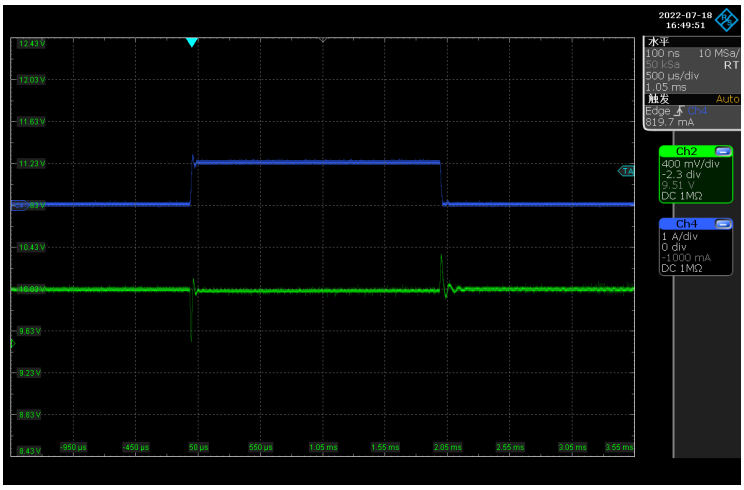

10μF C_{ADJ}

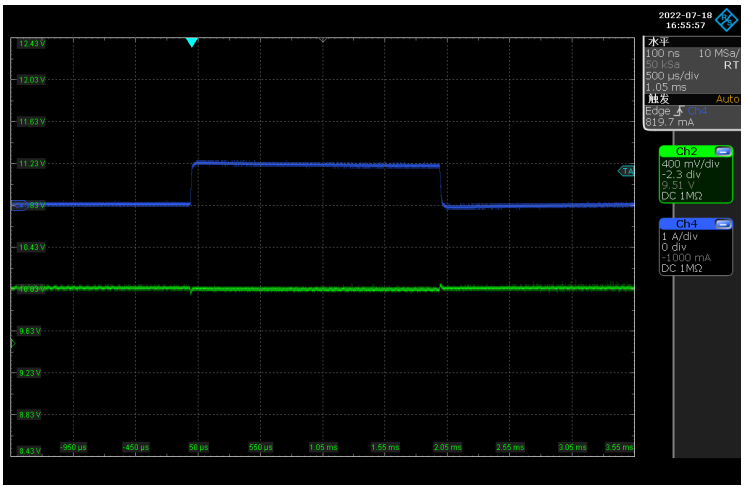

Short Circuit Protection (SCP)

C_{IN} = 0.1μF, C_{OUT} = 1.0μF, V_{OUT} = 10V, V_{IN} = 15V, V_{OUT} short to GND, CH_2: V_{OUT}, CH_4: I_{OUT}

SCP Instant

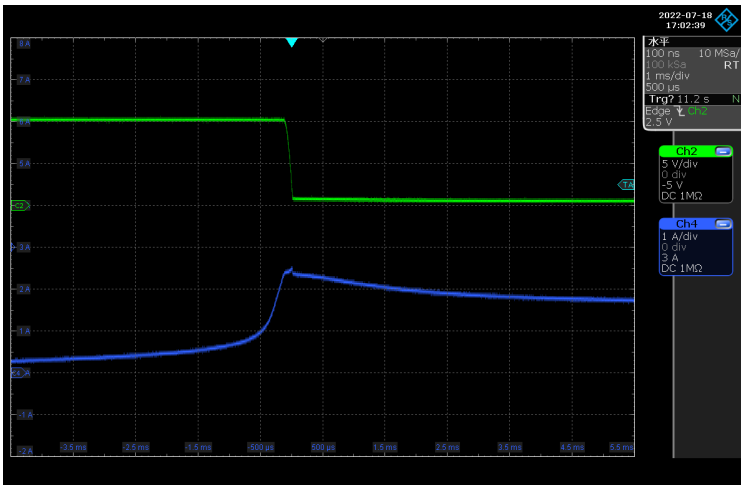

SCP Release

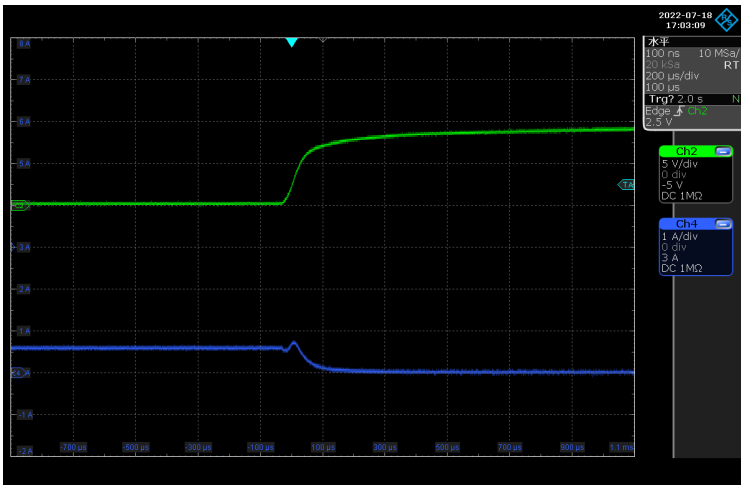

8 Detailed Description

8.1 Description

LM317 is an adjustable 3-terminal positive voltage regulator designed to supply more than 1.5A of load current with an output voltage adjustable over a 1.2 to 37V. It employs internal current limiting, thermal shut-down and safe area compensation.

8.2 Functional Block Diagram

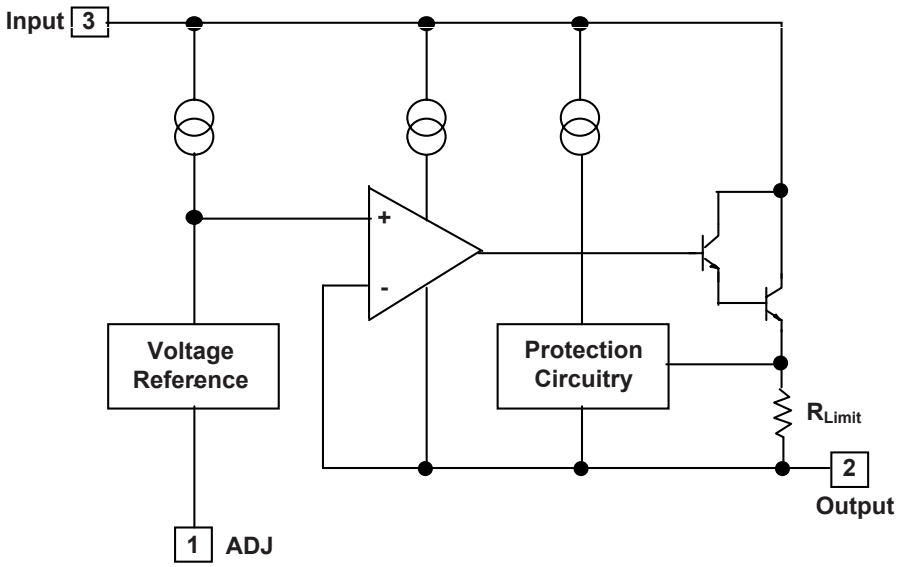

8.3 Feature Description

Comprehensive Overload Protection

LM317 is internally integrated with current limit and thermal shutdown protection. When the output current is large or the junction temperature is higher than the rated range of the data sheet to a certain extent, LM317 will enter the protection state and reduce the output to close to 0V to prevent accidental damage to the device. After the output current or junction temperature decreases to a certain extent, LM317 will be released from the protection state and output normally.

When OUT is short circuited to GND, LM317 will also enter the protection state and maintain the current at a low level. If the short circuit is released, LM317 will also release the protection status and output normally.

To ensure reliable operation, please limit the junction temperature to the specified range of *Recommended Operating Conditions* in the data sheet. Applications that exceed the recommended temperature range may cause the equipment to exceed its operating specifications. Although the internal protection circuitry of the device is designed to protect against thermal overall conditions, this circuitry is not intended to replace proper heat sinking. Continuously running the device into thermal shutdown or above the maximum recommended junction temperature reduces long-term reliability.

8 Detailed Description

8.3 Feature Description (continued)

Minimum Operating Current

LM317 needs to provide bias current between OUT and ADJ to make the device work normally. The load or feedback must consume this minimum current for regulation, otherwise the output may be too high. Refer to the *Electrical Characteristics* table for the minimum load current required to maintain regulation.

Minimum Operating Voltage Difference

LM317 requires a voltage difference (V_{IN} - V_{OUT}) of at least 3V between input and output before it can operate in the normal working state. The responsible device may not maintain the normal output state. The relationship between the minimum working voltage difference and the output current is shown in Figure 8-1 (Typ.).

Programmable Feedback

The device will provide 1.25V (Typ.) bias output voltage between OUT and ADJ, and the output voltage or current (not both) can be easily programmed through external resistance. For current regulation applications, a single resistor with a resistance value of (1.25V / I_{OUT}) and a rated power greater than ($(1.25V)^2$ / R) shall be used. For voltage regulation applications, two resistors set the output voltage.

Normal Operation

LM317 is a three terminal positive voltage regulator with adjustable output. During normal operation, LM317 will maintain a reference voltage V_{REF} of 1.25V (Typ.) between OUT and ADJ. This reference voltage V_{REF} is converted from R_1 to programming current I_{PROG} (see Figure 8-2), which flows to ground through R_2. The regulated output voltage is given by the following formula:

$$V_{OUT} = V_{REF} \times \left(1 + \frac{R_2}{R_1}\right) + I_{ADJ} \times R_2$$

As an error term in the formula, I_{ADJ} is designed to be less than 100μA and keep constant. Therefore, in most applications, this item can be negligible. Since the LM317 requires the minimum operating current and the minimum operating voltage difference for normal operation, the corresponding conditions shall be met in the circuit design.

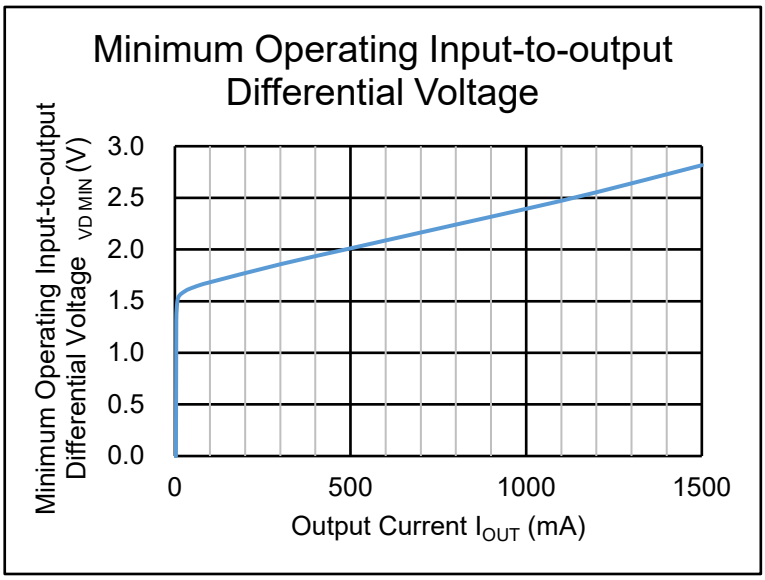

Figure 8-1. Minimum Operating Input-to-output Differential Voltage

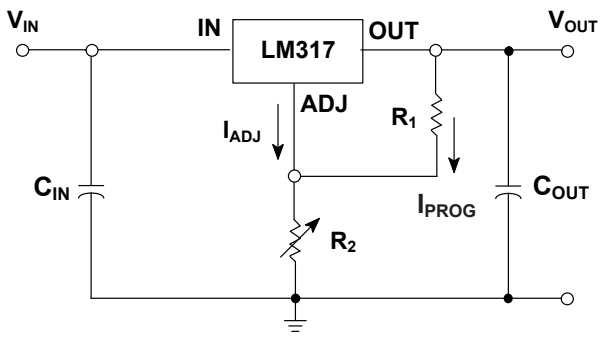

Figure 8-2. Basic Normal Operation

9 Application and Implementation

9.1 Application Information

Load Regulation

Following the following design recommendations can help LM317 achieve better load regulation. The switching resistor R_1 shall be connected as close to the voltage regulator as possible to minimize the voltage drop of the line effectively connected in series with the reference voltage and avoid poor adjustment rate. The grounding terminal of R_2 can be returned close to the load grounding terminal to provide remote grounding sampling and improve the load adjustment rate.

External Capacitors

A 0.1μF disc or 1.0μF tantalum input bypass capacitor (C_{IN}) is recommended to reduce the sensitivity to input line impedance. The adjustment terminal may be bypassed to ground to improve ripple rejection.

A C_{ADJ} of 10μF (between OUT and GND) is recommended to improve ripple rejection. It prevents amplification of the ripple as the output voltage is adjusted higher. Although the LM317 is stable with no output capacitance, like any feedback circuit, certain values of external capacitance can cause excessive ringing.

An output capacitance (C_{OUT}) in the form of a 1.0μF tantalum or 25μF aluminum electrolytic capacitor on the output swamps this effect and insures stability.

The input capacitance (C_{IN}) and output capacitance (C_{OUT}) should be placed as close to the corresponding device pins as possible (C_{IN} for IN, C_{OUT} for OUT). When the LM317 is used as a reference voltage source instead of a peripheral resistor, it is recommended to use an input capacitor of 1μF or more to obtain better voltage stability.

Protection Diodes

When external capacitors are used with any IC regulator it is sometimes necessary to add protection diodes to prevent the capacitors from discharging through low current points into the regulator. Figure 9-1 shows the LM317 with the recommended protection diodes for output voltages in excess of 25 V or high capacitance values (C_{OUT} > 25μF, C_{ADJ} > 10μF). Diode D_1 prevents C_{OUT} from discharging through the IC during an input short circuit. Diode D2 protects against capacitor C_{ADJ} discharging through the IC during an output short circuit. The combination of diodes D_1 and D_2 prevents C_{ADJ} from discharging through the IC during an input short circuit.

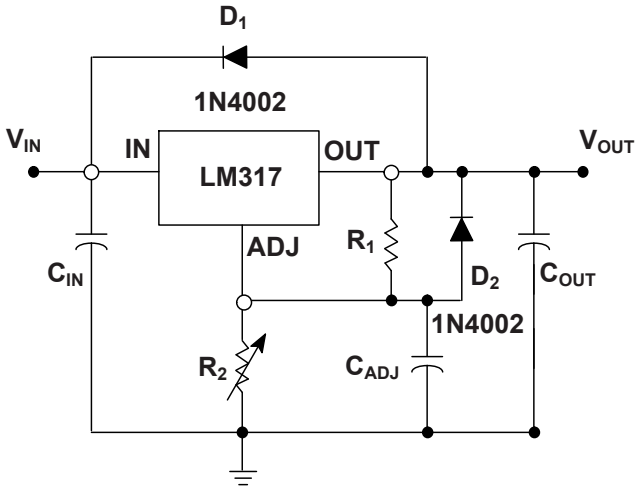

Figure 9-1. Voltage Regulator with Protection Diodes

9 Application and Implementation

9.2 System Example

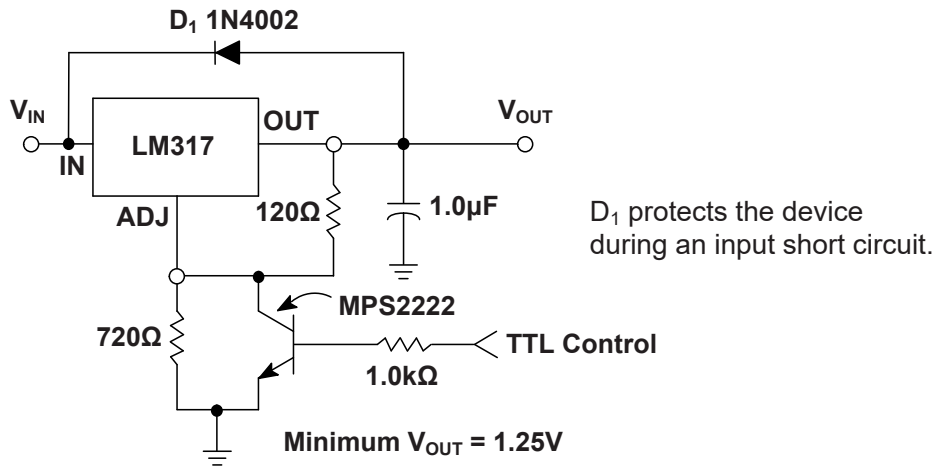

Figure 9-2. 5V Electronic Shutdown Regulator

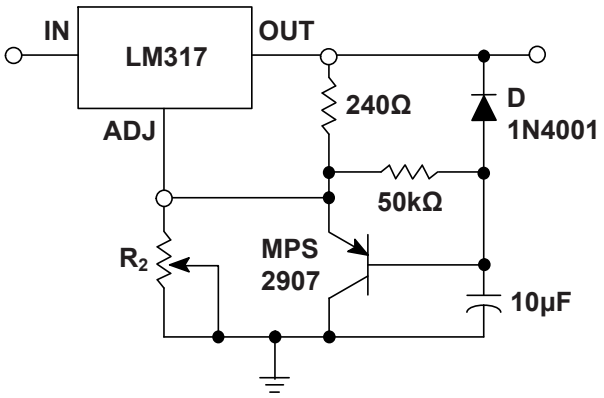

Figure 9-3. Slow Turn-On Regulator

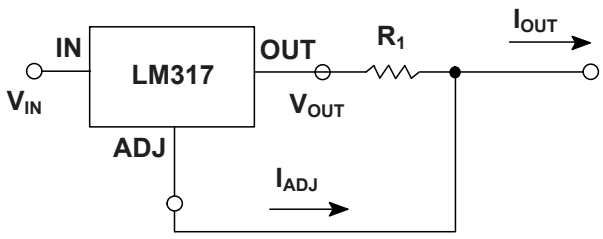

$$I_{OUT} = (\frac{V_{REF}}{R_1} + I_{ADJ}) \approx \frac{1.25V}{R_1}$$

Figure 9-4. Current Regulator

NOTE

The application information in this section is not part of the data sheet component specification, and JSCJ makes no commitment or statement to guarantee its accuracy or completeness. Customers are responsible for determining the rationality of corresponding components in their circuit design and making tests and verifications to ensure the normal realization of their circuit design.

10 Mechanical Information

10.1 SOT-223 Mechanical Information

SOT-223 Outlines Dimensions

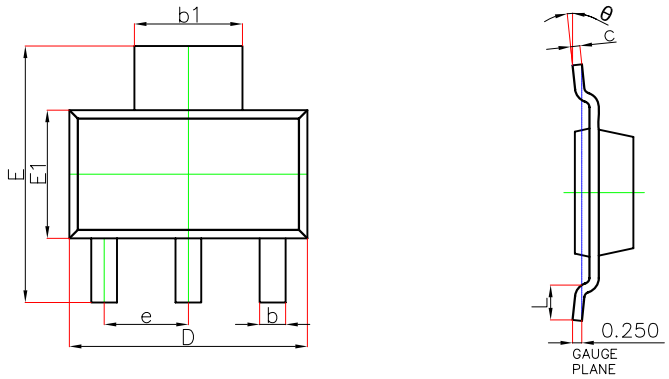

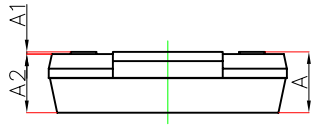

Symbol	Dimensions In Millimeters		Dimensions In Inches	
	Min.	Max.	Min.	Max.
A	——	1.800	——	0.071
A1	0.020	0.100	0.001	0.004
A2	1.500	1.700	0.059	0.067
b	0.660	0.840	0.026	0.033
b1	2.900	3.100	0.114	0.122
c	0.230	0.350	0.009	0.014
D	6.300	6.700	0.248	0.264
E	6.700	7.300	0.264	0.287
E1	3.300	3.700	0.130	0.146
e	2.300(BSC)		0.091(BSC)	
L	0.750	——	0.030	——
θ	0°	10°	0°	10°

SOT-223 Suggested Pad Layout

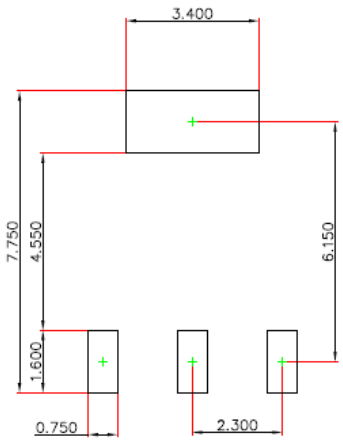

Note:

1. Controlling dimension: in millimeters.
2. General tolerance: ±0.05mm.
3. The pad layout is for reference purposes only.

10 Mechanical Information

10.2 TO-220-3L Mechanical Information

TO-220-3L Outlines Dimensions

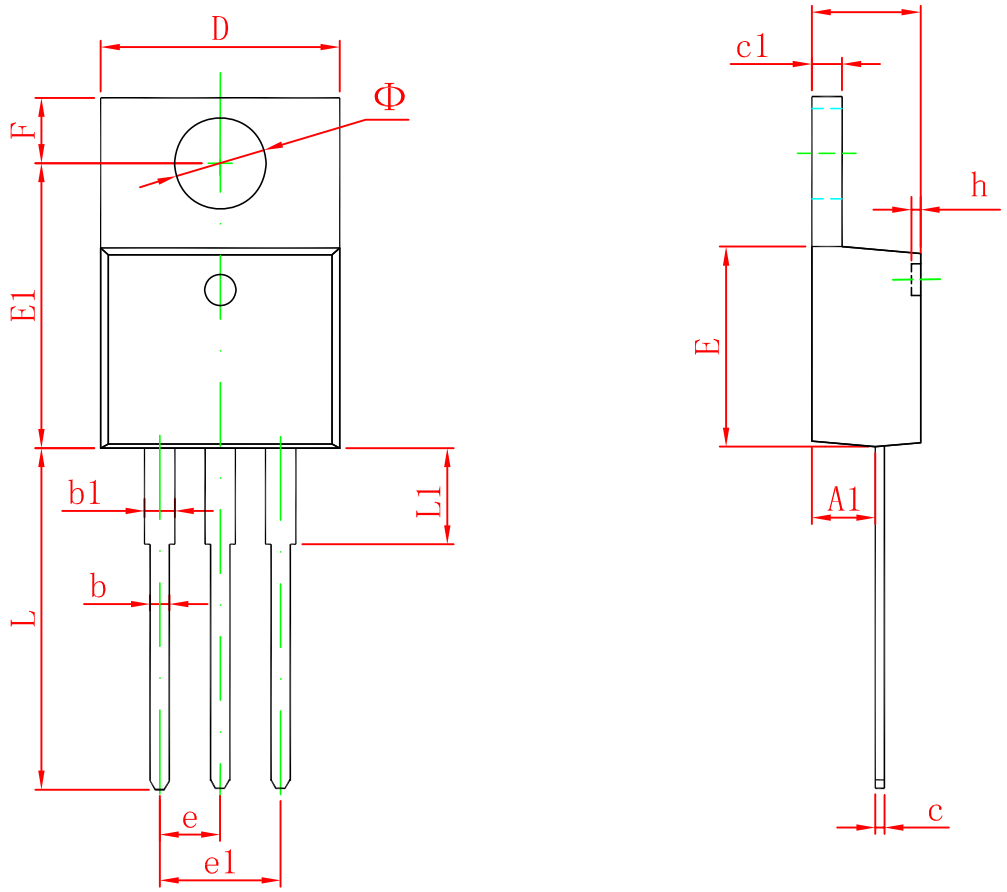

Symbol	Dimensions In Millimeters		Dimensions In Inches	
	Min	Max	Min	Max
A	4.470	4.670	0.176	0.184
A1	2.520	2.820	0.099	0.111
b	0.710	0.910	0.028	0.036
b1	1.170	1.370	0.046	0.054
c	0.310	0.530	0.012	0.021
c1	1.170	1.370	0.046	0.054
D	10.010	10.310	0.394	0.406
E	8.500	8.900	0.335	0.350
E1	12.060	12.460	0.475	0.491
e	2.540 TYP		0.100 TYP	
e1	4.980	5.180	0.196	0.204
F	2.590	2.890	0.102	0.114
h	0.000	0.300	0.000	0.012
L	13.400	13.800	0.528	0.543
L1	3.560	3.960	0.140	0.156
Φ	3.735	3.935	0.147	0.155

10 Mechanical Information

10.3 TO-252-2L Mechanical Information

TO-252-2L Outlines Dimensions

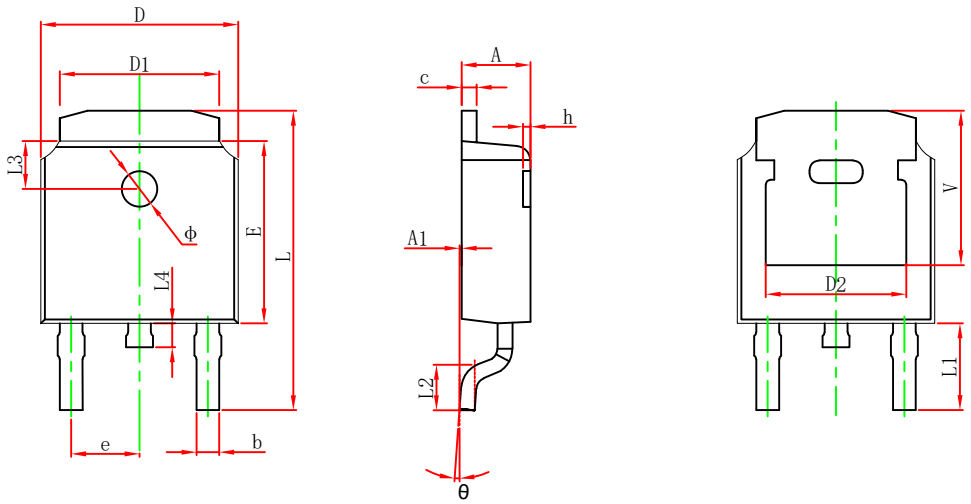

Symbol	Dimensions In Millimeters		Dimensions In Inches	
	Min.	Max.	Min.	Max.
A	2.200	2.400	0.087	0.094
A1	0.000	0.127	0.000	0.005
b	0.635	0.770	0.025	0.030
c	0.460	0.580	0.018	0.023
D	6.500	6.700	0.256	0.264
D1	5.100	5.460	0.201	0.215
D2	4.830 REF.		0.190 REF.	
E	6.000	6.200	0.236	0.244
e	2.186	2.386	0.086	0.094
L	9.712	10.312	0.382	0.406
L1	2.900 REF.		0.114 REF.	
L2	1.400	1.700	0.055	0.067
L3	1.600 REF.		0.063 REF.	
L4	0.600	1.000	0.024	0.039
Φ	1.100	1.300	0.043	0.051
θ	0°	8°	0°	8°
h	0.000	0.300	0.000	0.012
V	5.250 REF.		0.207 REF.	

TO-252-2L Suggest Pad Layout

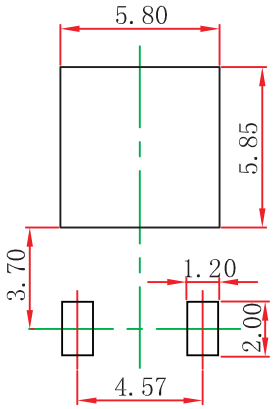

Note:

1. Controlling dimension: in millimeters.
2. General tolerance: ±0.05mm.
3. The pad layout is for reference purposes only.

10 Mechanical Information

10.4 TO-263-2L Mechanical Information

TO-263-2L Outline Dimensions

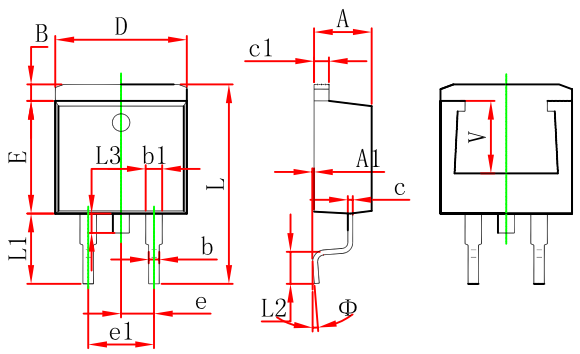

Symbol	Dimensions In Millimeters		Dimensions In Inches	
	Min.	Max.	Min.	Max.
A	4.470	4.670	0.176	0.184
A1	0.000	0.150	0.000	0.006
B	1.120	1.420	0.044	0.056
b	0.710	0.910	0.028	0.036
b1	1.170	1.370	0.046	0.054
c	0.310	0.530	0.012	0.021
c1	1.170	1.370	0.046	0.054
D	10.010	10.310	0.394	0.406
E	8.500	8.900	0.335	0.350
e	2.540 TYP.		0.100 TYP.	
e1	4.980	5.180	0.196	0.204
L	14.940	15.500	0.588	0.610
L1	4.950	5.450	0.195	0.215
L2	2.340	2.740	0.092	0.108
L3	1.300	1.700	0.051	0.067
Φ	0°	8°	0°	8°
V	5.600 REF.		0.220REF.	

TO-263-2L Suggest Pad Layout

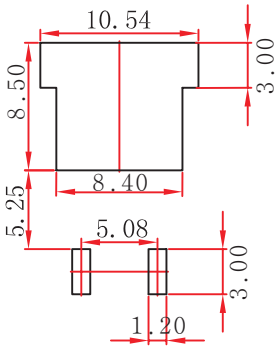

Note:

1. Controlling dimension: in millimeters.
2. General tolerance: ±0.05mm.
3. The pad layout is for reference purposes only.

11 Packaging Information

11.1 SOT-223 Tape and Reel Information

SOT-223 Embossed Carrier Tape

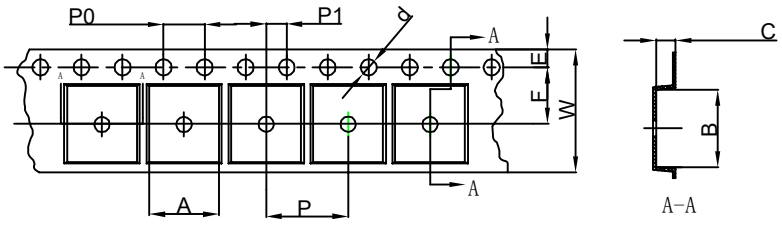

Packaging Description:

SOT-223 parts are shipped in tape. The carrier tape is made from a dissipative (carbon filled) polycarbonate resin. The cover tape is a multilayer film (Heat Activated Adhesive in nature) primarily composed of polyester film, adhesive layer, sealant, and anti-static sprayed agent. These reeled parts in standard option are shipped with 2,500 units per 13" or 33.0cm diameter reel. The reels are clear in color and is made of polystyrene plastic (anti-static coated).

Dimensions are in millimeter										
Pkg type	A	B	C	d	E	F	P0	P	P1	W
SOT-223	6.765	7.335	1.88	Ø1.50	1.75	5.50	4.00	8.00	2.00	12.00

SOT-223 Tape Leader and Trailer

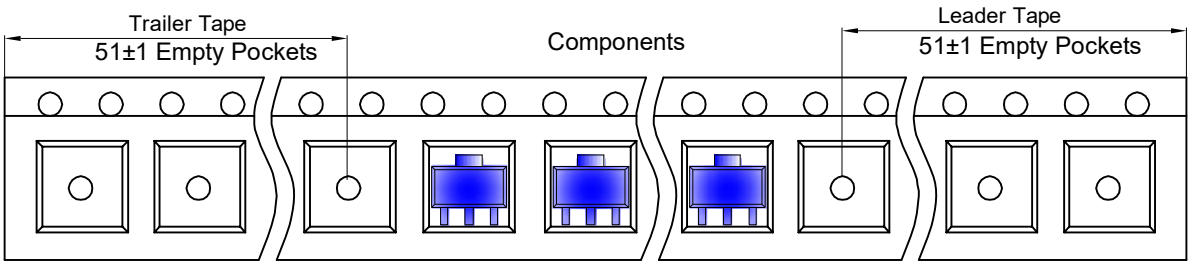

SOT-223 Reel

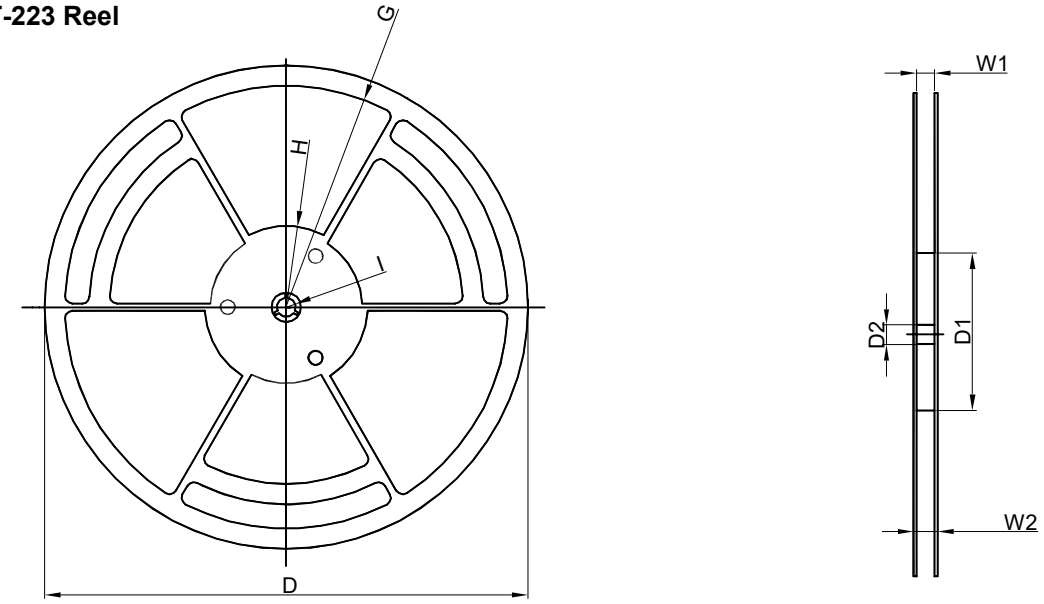

Dimensions are in millimeter								
Reel Option	D	D1	D2	G	H	I	W1	W2
13"Dia	Ø330.00	100.00	13.00	R151.00	R56.00	R6.50	12.40	17.60

REEL	Reel Size	Box	Box Size(mm)	Carton	Carton Size(mm)	G.W.(kg)
2,500 pcs	13 inch	2,500 pcs	336×336×48	20,000 pcs	445×355×365	

11 Packaging Information

11.2 TO-252-2L Tape and Reel Information

TO-252-2L Embossed Carrier Tape

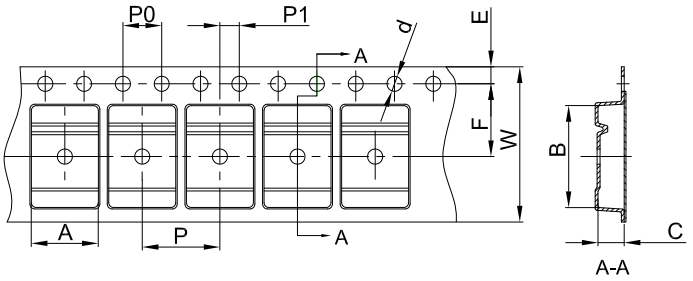

Packaging Description:

TO-252 parts are shipped in tape. The carrier tape is made from a dissipative (carbon filled) polycarbonate resin. The cover tape is a multilayer film (Heat Activated Adhesive in nature) primarily composed of polyester film, adhesive layer, sealant, and anti-static sprayed agent. These reeled parts in standard option are shipped with 25,00 units per 13" or 33.0 cm diameter reel. The reels are clear in color and is made of polystyrene plastic (anti-static coated).

Dimensions are in millimeter										
Pkg type	A	B	C	d	E	F	P0	P	P1	W
TO-252	6.90	10.50	2.70	Ø1.55	1.75	7.50	4.00	8.00	2.00	16.00

TO-252-2L Tape Leader and Trailer

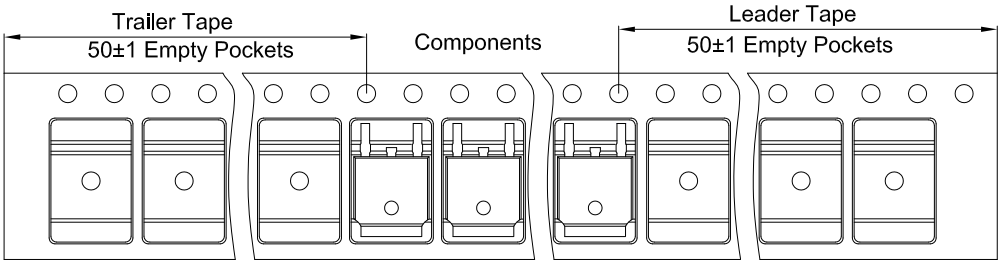

TO-252-2L Reel

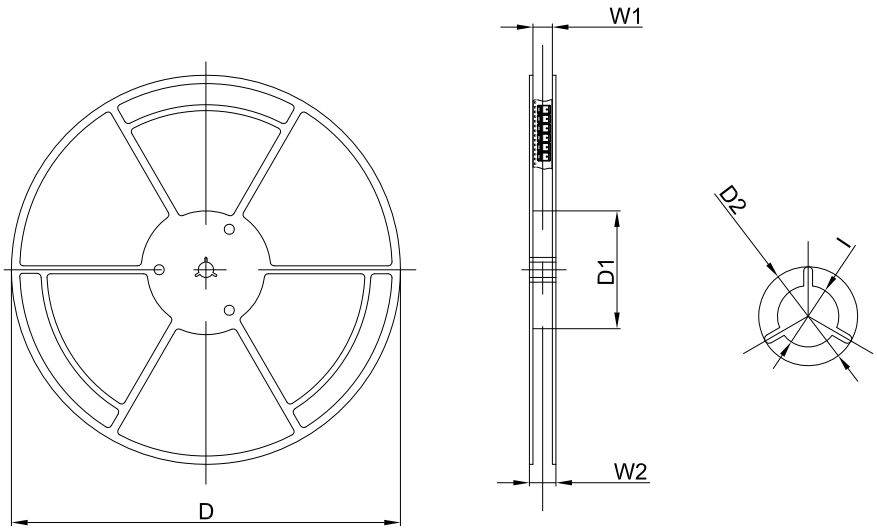

Dimensions are in millimeter						
Reel Option	D	D1	D2	W1	W2	I
13"Dia	330.00	100.00	Ø21.00	16.40	21.00	Ø13.00

REEL	Reel Size	Box	Box Size(mm)	Carton	Carton Size(mm)	G.W.(kg)
2,500 pcs	13inch	2,500 pcs	340×336×29	25,000 pcs	353×346×365	

11 Packaging Information

11.3 TO-263-2L Tape and Reel Information

TO-263-2L Embossed Carrier Tape

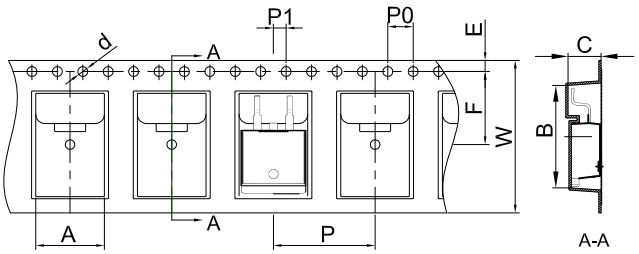

Packaging Description:

TO-263-2L parts are shipped in tape. The carrier tape is made from a dissipative (carbon filled) polycarbonate resin. The cover tape is a multilayer film (Heat Activated Adhesive in nature) primarily composed of polyester film, adhesive layer, sealant, and anti-static sprayed agent. These reeled parts in standard option are shipped with 800 units per 13" or 33.0 cm diameter reel. The reels are clear in color and is made of polystyrene plastic (anti-static coated).

Dimensions are in millimeter										
Pkg type	A	B	C	d	E	F	P0	P	P1	W
TO-263-2L	10.80	16.13	5.21	Ø1.55	1.75	11.50	4.00	16.00	2.00	24.00

TO-263-2L Tape Leader and Trailer

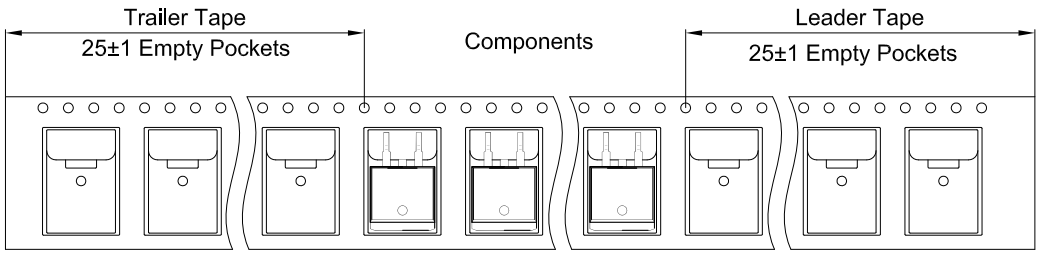

TO-263-2L Reel

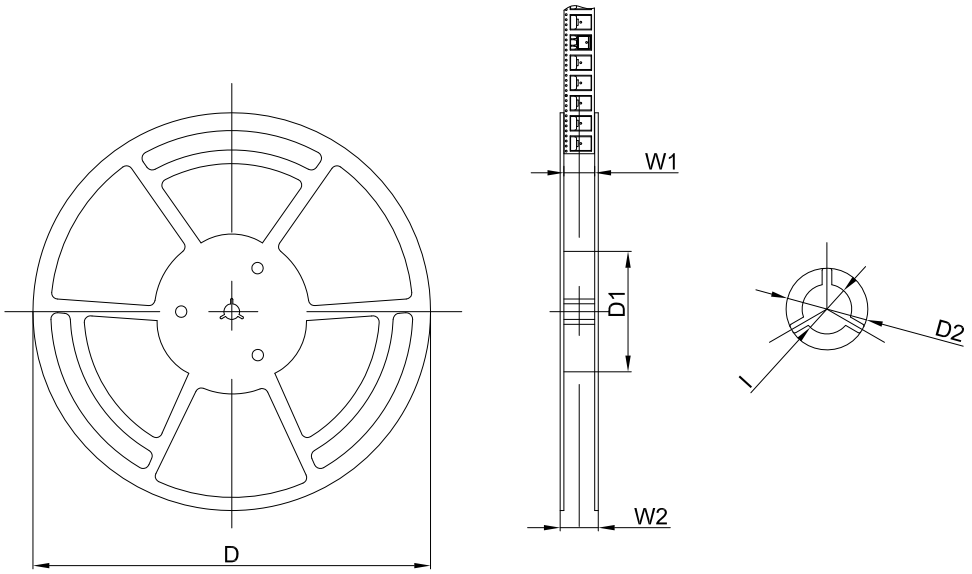

Dimensions are in millimeter						
Reel Option	D	D1	D2	W1	W2	I
13"Dia	Ø330.00	100.00	Ø21.00	24.4	30.4	Ø13.00

REEL	Reel Size	Box	Box Size(mm)	Carton	Carton Size(mm)	G.W.(kg)
800 pcs	13 inch	800 pcs	340×336×36	8,000 pcs	400×353×365	

12 Notes and Revision History

12.1 Associated Product Family and Others

To view other products of the same type or IC products of other types, click the official website of JSCJ -- https: ***www.jscj-elec.com*** for more details.

12.2 Notes

Electrostatic Discharge Caution

This IC may be damaged by ESD. Relevant personnel shall comply with correct installation and use specifications to avoid ESD damage to the IC. If appropriate measures are not taken to prevent ESD damage, the hazards caused by ESD include but are not limited to degradation of integrated circuit performance or complete damage of integrated circuit. For some precision integrated circuits, a very small parameter change may cause the whole device to be inconsistent with its published specifications.

Junction-to-ambient Thermal Resistance $R_{\Theta JA}$

Definition: The junction to ambient thermal resistance $R_{\Theta JA}$ is a metric of the thermal performance of the device's packages. By comparing the metric of different companies on the same product package, the thermal performance of the product can be roughly estimated in a relative sense. $R_{\Theta JA}$ is measured under the conditions specified in the corresponding specifications. If the measurement of $R_{\Theta JA}$ of two products follows different specifications and standards, or although the same specifications and standards are adopted, it is not tested in strict accordance with the specifications, then the $R_{\Theta JA}$ of two products will lose the meaning of comparison. This product follows the test specified by JEDEC in the EIA/JESD51-x series documents. $R_{\Theta JA}$ is measured in still air with T_A = 25°C and installed on a 1 in 2 FR-4 board covered with 2 ounces of copper.

Usage: Junction to ambient thermal resistance $R_{\Theta JA}$ is a parameter defined at the system level rather than on a single device or chip. In the test of $R_{\Theta JA}$ provided in the data sheet, most of the heat generated by the operation of the device is dissipated through the test board rather than the packaging surface of the device. In fact, the design and layout of PCB (such as chip or pad size, internal package geometry, etc.) will significantly affect $R_{\Theta JA}$. At this time, any calculation of the junction temperature or thermal power consumption of the device by applying $R_{\Theta JA}$ in the data sheet will have a very large error, so that it does not match the real performance of the device.

Therefore, $R_{\Theta JA}$ should be used as the relative comparison of product packaging thermal performance between different companies, rather than directly using $R_{\Theta JA}$ in the data sheet in the actual calculation.

Reference Maximum Power Dissipation for Continuous Operation $P_{D\ Ref}$

The reference maximum power dissipation for continuous operation $P_{D\ Ref}$ is not an accurate value obtained from the actual test. It is a theoretical value obtained according to the heat dissipation capacity of packaging combined with practical application. It is used to compare the differences of heat dissipation capacity more intuitively between products of different companies. This value is only for estimation reference and cannot be used as an index of the actual performance of the device for circuit design.

12 Notes and Revision History

12.3 Revision History

July 2022: changed from rev - 2.0 to rev - 3.0:

All data sheet, modified data sheet format;

Assembled LM317 SOT-223 rev - 2.0, LM317 TO-220-3L rev - 2.0, LM317 TO-252-2L rev - 2.0 and LM317 TO-263-2L rev - 2.0 devices into LM317;

Added Introduction, Applications, Available Package, Pin Configuration and Marking Information, Recommended Operating Conditions, ESD Ratings, Thermal Information, Detailed Description, Application and Implementation, Notes and Revision History section;

Page 24, DISCLAIMER, deleted the description of "automotive electronics".

DISCLAIMER

IMPORTANT NOTICE, PLEASE READ CAREFULLY

The information in this data sheet is intended to describe the operation and characteristics of our products. JSCJ has the right to make any modification, enhancement, improvement, correction or other changes to any content in this data sheet, including but not limited to specification parameters, circuit design and application information, without prior notice.

Any person who purchases or uses JSCJ products for design shall: 1. Select products suitable for circuit application and design; 2. Design, verify and test the rationality of circuit design; 3. Procedures to ensure that the design complies with relevant laws and regulations and the requirements of such laws and regulations. JSCJ makes no warranty or representation as to the accuracy or completeness of the information contained in this data sheet and assumes no responsibility for the application or use of any of the products described in this data sheet.

Without the written consent of JSCJ, this product shall not be used in occasions requiring high quality or high reliability, including but not limited to the following occasions: medical equipment, military facilities and aerospace. JSCJ shall not be responsible for casualties or property losses caused by abnormal use or application of this product.

Official Website: www.jscj-elec.com

Copyright © JIANGSU CHANGJING ELECTRONICS TECHNOLOGY CO., LTD.